BODY

CONTENTS

HOOD 3
FENDER* 4
SEALANT 4
FENDER 5
FUEL FILLER DOOR 6
WINDOW GLASS 8
ADHESIVE 8
SPECIAL TOOLS 8
WINDOW REPAIR 8
WINDSHIELD 10
QUARTER WINDOW GLASS 14
BACK DOOR GLASS 17
DOOR 19
SERVICE SPECIFICATIONS 19
SEALANT 19
SPECIAL TOOLS 19
TROUBLESHOOTING 20
ON-VEHICLE SERVICE 35
Door Fit Adjustment 35
Door Window Glass Adjustment 35
Defective Power Window Adjustment and Replacement 36
Power Window Safety Mechanism Check 36
Door Outside Handle Play Check 36
Power Window Operation Current Check ... 37
Circuit Breaker (Incorporated in the Power Window Motor) Check 37
Door Inside Handle Play Check and Adjustment 37

CONTINUED ON NEXT PAGE

WARNINGS REGARDING SERVICING OF SUPPLEMENTAL RESTRAINT SYSTEM (SRS) EQUIPPED VEHICLES

WARNING!

(1) Improper service or maintenance of any component of the SRS, or any SRS-related component, can lead to personal injury or death to service personnel (from inadvertent firing of the air bag) or to the driver and passenger (from rendering the SRS inoperative).

(2) Service or maintenance of any SRS component or SRS-related component must be performed only at an authorized MITSUBISHI dealer.

(3) MITSUBISHI dealer personnel must thoroughly review this manual, and especially its GROUP 52B – Supplemental Restraint System (SRS) before beginning any service or maintenance of any component of the SRS or any SRS-related component.

NOTE

The SRS includes the following components: SRS-ECU, SRS warning lamp, air bag module, clock spring, side impact sensors and interconnecting wiring. Other SRS-related components (that may have to be removed/installed in connection with SRS service or maintenance) are indicated in the table of contents by an asterisk (*).

DOOR ASSEMBLY 38
DOOR TRIM AND WATERPROOF FILM 40
DOOR GLASS AND REGULATOR 46
DOOR HANDLE AND LATCH 52
WINDOW GLASS RUNCHANNEL AND DOOR OPENING WEATHERSTRIP 56
BACK DOOR 58
SERVICE SPECIFICATION 58
SEALANT 58
SPECIAL TOOLS 58
TROUBLESHOOTING 59
ON-VEHICLE SERVICE 59
Back Door Fit Adjustment 59
Back Door Handle Play Check 59
BACK DOOR ASSEMBLY 60
BACK DOOR TRIM AND WATERPROOF FILM 62
BACK DOOR HANDLE AND LATCH 63
KEYLESS ENTRY SYSTEM 65
SPECIAL TOOL 65
TROUBLESHOOTING 65
ON-VEHICLE SERVICE 71
How to Replace a Battery of the Transmitter 71
Encrypted Code Registration Method 71
KEYLESS ENTRY SYSTEM 73
SUNROOF 74
SERVICE SPECIFICATION 74
TROUBLESHOOTING 74
ON-VEHICLE SERVICE 78
Water Test 78
Sunroof Fit Adjustment 78
SUNROOF 79

HOOD

REMOVAL AND INSTALLATION

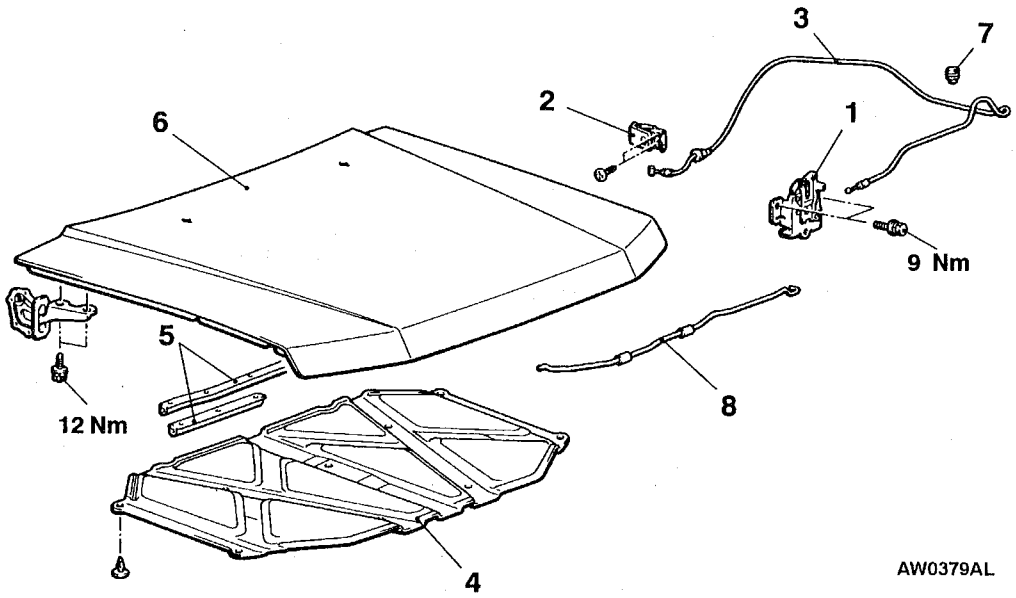

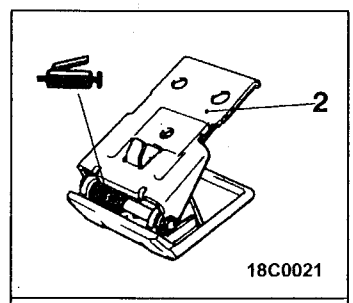

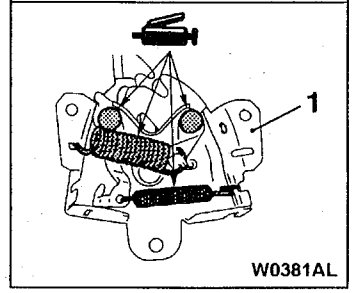

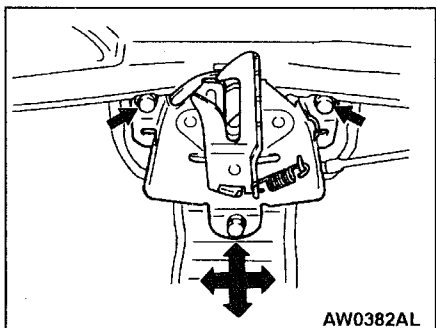

Adjustment of hood step and hood striker linkage

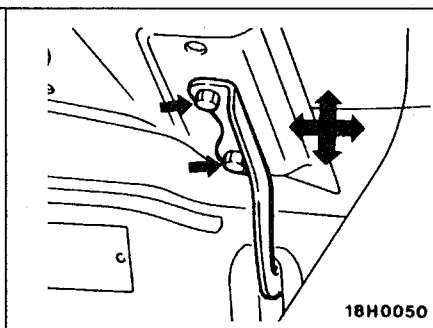

Adjustment of clearance around hood

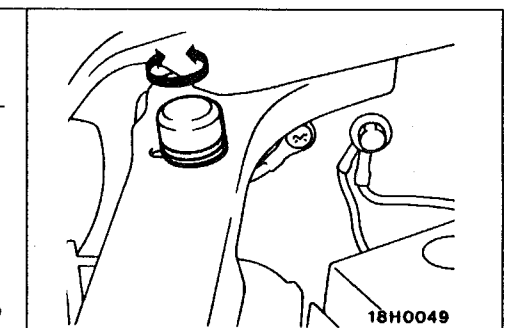

Adjustment of hood height

Hood latch removal steps

- ●. Front grille (Refer to GROUP 51.)
1. Hood latch

Hood lock release cable removal steps

2. Hood lock release handle
3. Hood lock release cable

Hood removal steps

4. Hood silencer
5. Hood weatherstrip
- ●. Washer hose (Refer to GROUP 51.)
6. Hood
7. Hood bumper
8. Hood support rod

Clip positions

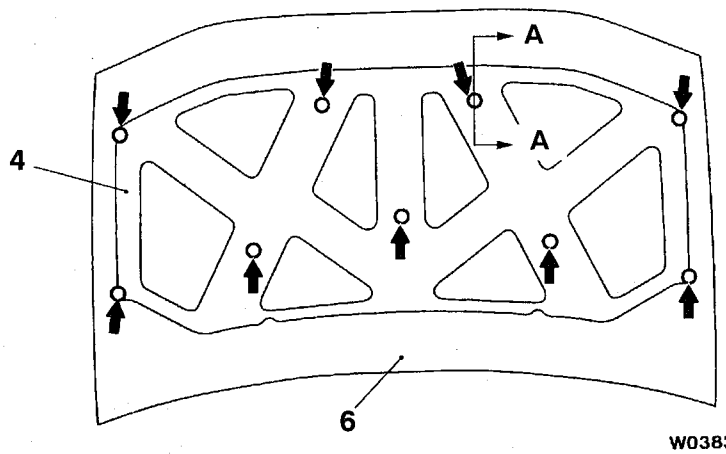

W0383AL

Section A – A

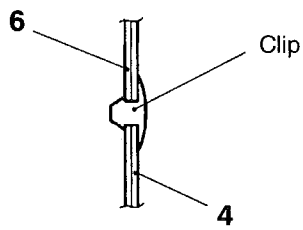

: Clip positions

V1110AE
00008889

FENDER

SEALANT

Item	Specified sealant	Remark
Splash shield	3M ATD Part No. 8625 or equivalent	Ribbon sealer

FENDER

REMOVAL AND INSTALLATION

Caution: SRS
Do not strike the front impact sensor when removing or installing the fender.

Pre-removal and Post-installation Operation
- Front Bumper Removal and Installation (Refer to GROUP 51.)
- Side Under Mirror Removal and Installation (Refer to GROUP 51.)

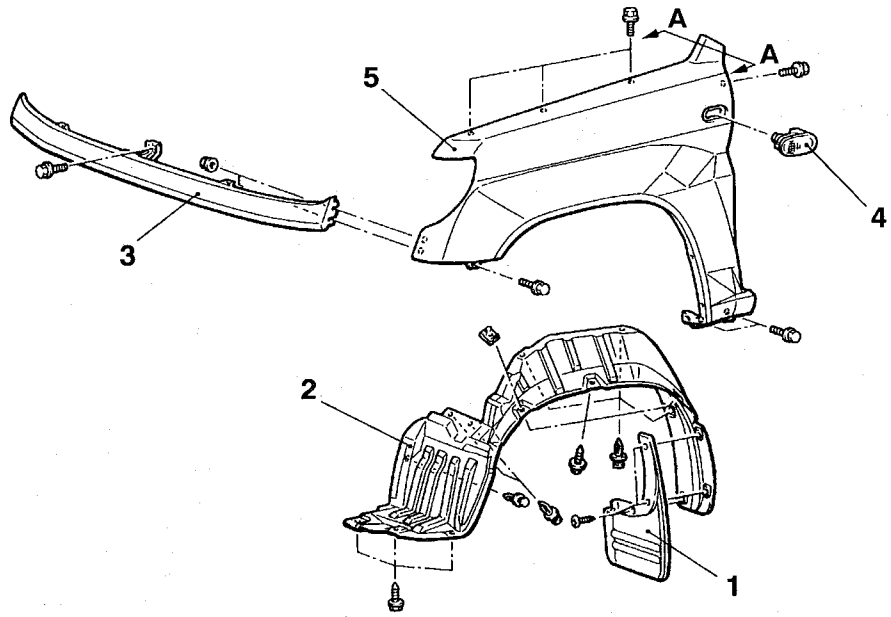

W0537AL
00008890

Section A – A

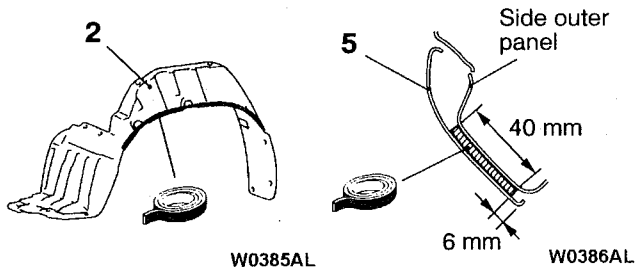

W0385AL W0386AL

Section B – B

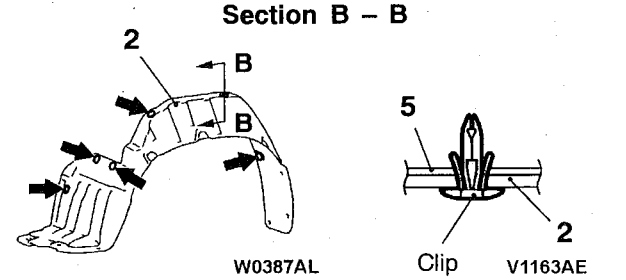

W0387AL V1163AE W0260AL

⬅ : Clip positions

Sealant: 3M ATD Part No. 8625 or equivalent

Removal steps

1. Mud guard
2. Splash shield
3. Grille filler panel

▶A◀ 4. Side turn signal lamp (Refer to GROUP 54.)
5. Fender

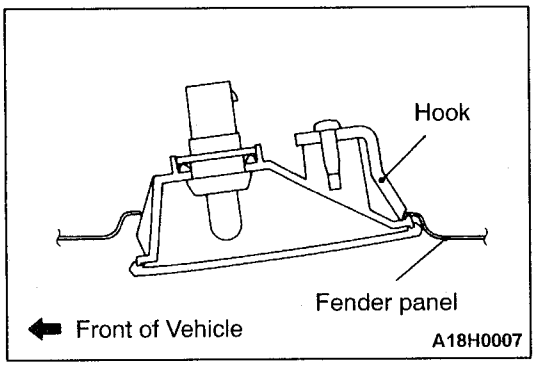

INSTALLATION SERVICE POINT

◀A▶ SIDE TURN SIGNAL LAMP REMOVAL

Engage the hook with the fender panel.

FUEL FILLER DOOR

REMOVAL AND INSTALLATION

Pre-removal and Post-installation Operations
- Rear Floor Console Removal and Installation (Refer to GROUP 52A.)
- Front Seat (Driver's side), Rear Seat Removal and Installation (Refer to GROUP 52A.)
- Quarter Trim, Lower (R.H.) Removal and Installation (Refer to GROUP 52A.)

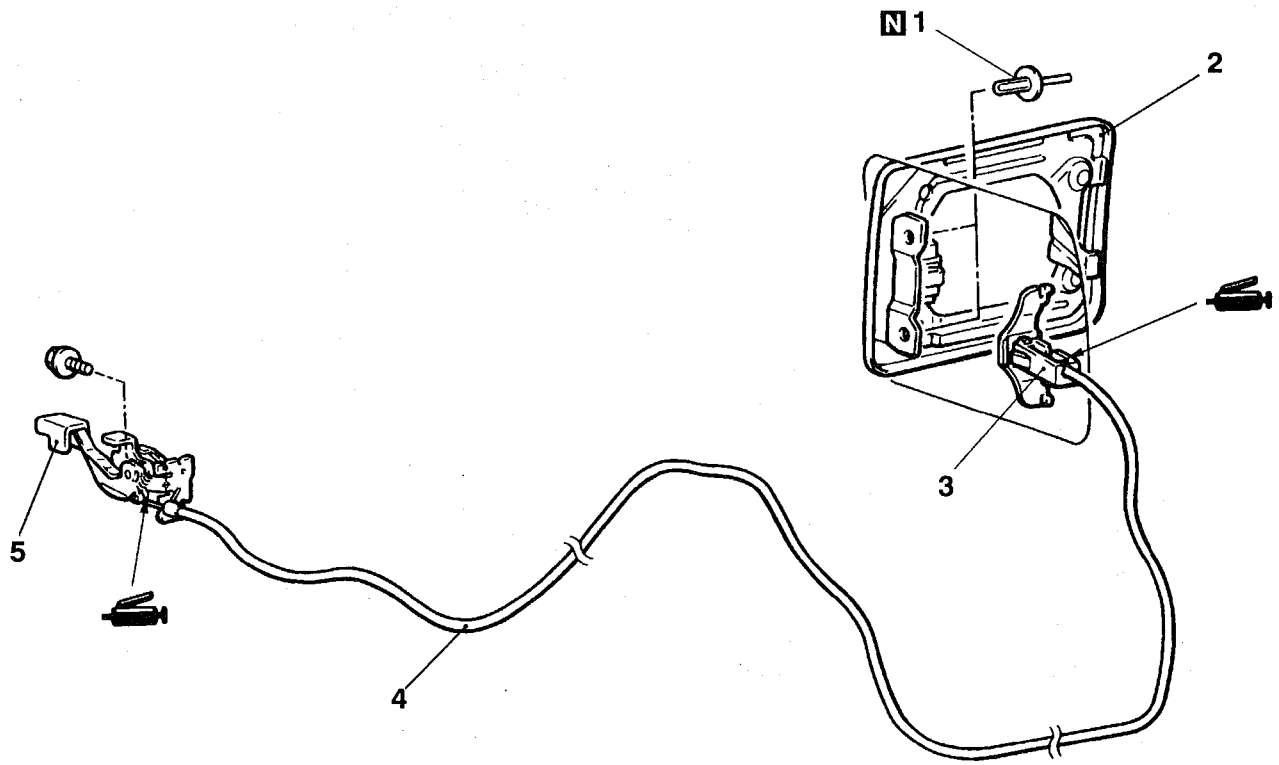

Removal steps

◀A▶ ▶A◀ 1. Rivet
2. Fuel filler door panel assembly
3. Fuel filler door lock assembly
4. Fuel filler door lock release cable
5. Lid lock release handle

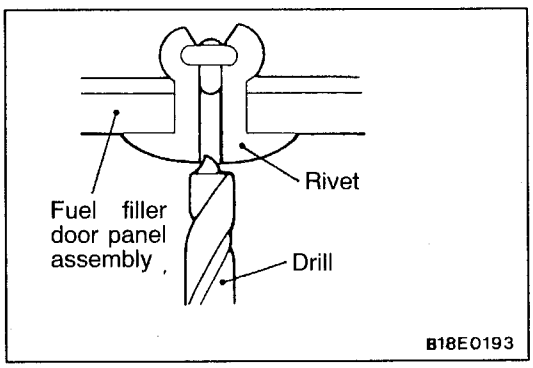

REMOVAL SERVICE POINT

◀A▶ RIVET REMOVAL

Use a drill (Ø4.0 – 5.5 mm) to break the rivet by drilling a hole, and then remove the rivet.

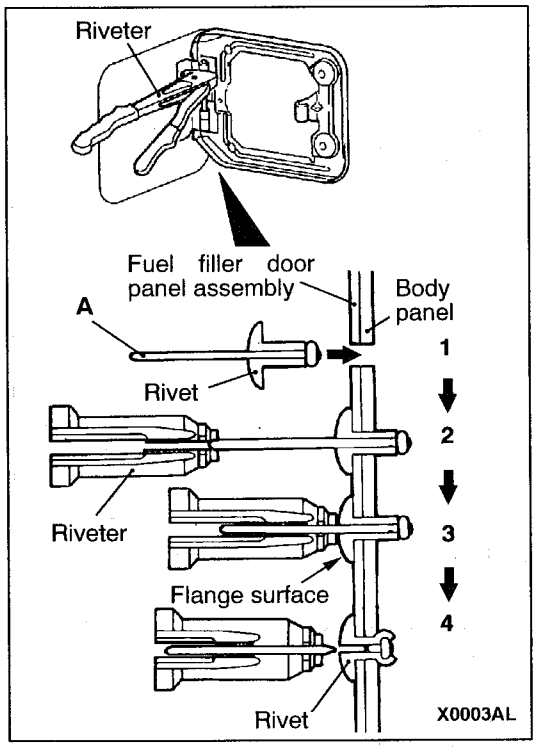

INSTALLATION SERVICE POINT

▶A◀ RIVET INSTALLATION

Use a riveter shown to install rivets as follows:

1. Insert a rivet in the body panel and fuel filler door panel assembly.
2. Insert the riveter to the rod (A shown) of a rivet.
3. Pressing the flange surface of the rivet with the riveter, handle the riveter.
4. The rod is cut at its thinnest point and the rivet is held in position.

WINDOW GLASS

ADHESIVE

Items	Specified adhesive
Windshield	3M ATD Part No. 8609 Super Fast Urethane Auto Glass Sealant or equivalent
Quarter window glass	
Back door glass	

SPECIAL TOOLS

Tool	Number	Name	Use
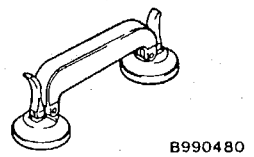 B990480	MB990480	Window glass holder	Removal and installation of windshield
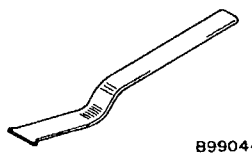 B990449	MB990449	Window moulding remover	Removal of roof drip moulding

WINDOW REPAIR

The following glass parts are installed with a liquid urethane adhesive method:

- Windshield
- Quarter window glass
- Back door window glass

ITEMS NEEDED

Name	Remarks
Adhesive	3M ATD Part No. 8609 Super Fast Urethane Auto Glass Sealant or equivalent
Primer	3M ATD Part No. 8608 Super Fast Urethane Primer or equivalent
Spacers	Available as service part
Dam	Available as service part
Anti-rust solvent (or Tectyl 506T...Valvoline Oil Company)	For rust prevention
Isopropyl alcohol	For grease removal from bonded surface
Steel piano wire	Dia. × length...0.6mm × 1m For cutting adhesive
Adhesive gun	For pressing-out adhesive

HANDLING OF AUTO WINDOW SEALER

Keep the sealant in a cool place, not exposed to the direct rays of the sun. Do not place any heavy article on the sealant nor press it, otherwise it will become deformed. Avoid storing the sealant for more than 6 months, because it will lose its sealing effect.

BODY PINCH-WELD FLANGE SERVICING

Before servicing the body pinch-weld flange, remove old adhesive completely. If the flange requires painting, bake it after painting is completed.

WORKING PROCESS

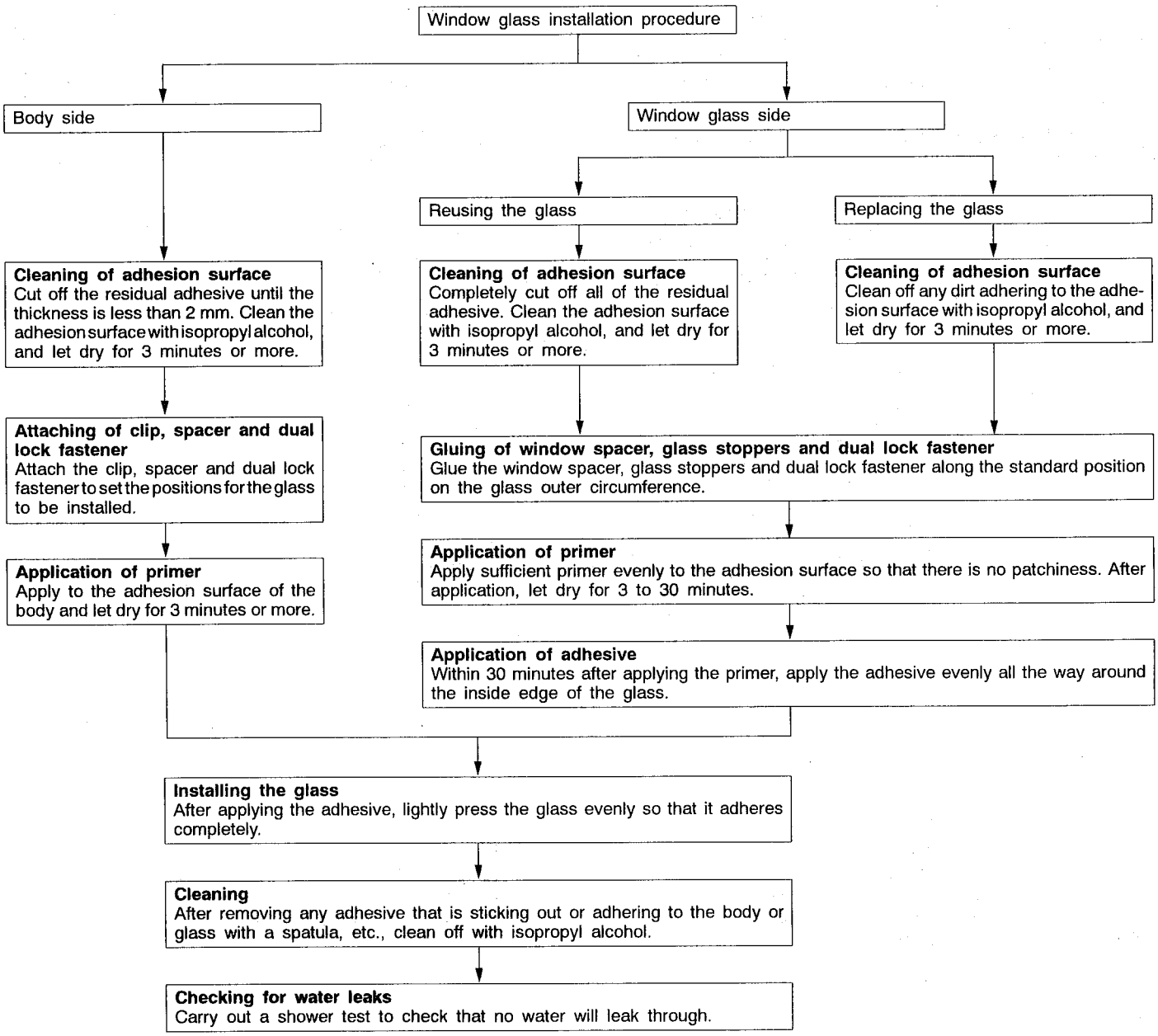

WINDSHIELD

REMOVAL AND INSTALLATION

Pre-removal and Post-installation Operations
- Front Pillar Trim Removal and Installation (Refer to GROUP 52A.)
- Headlining Removal and Installation (Refer to GROUP 52A.)

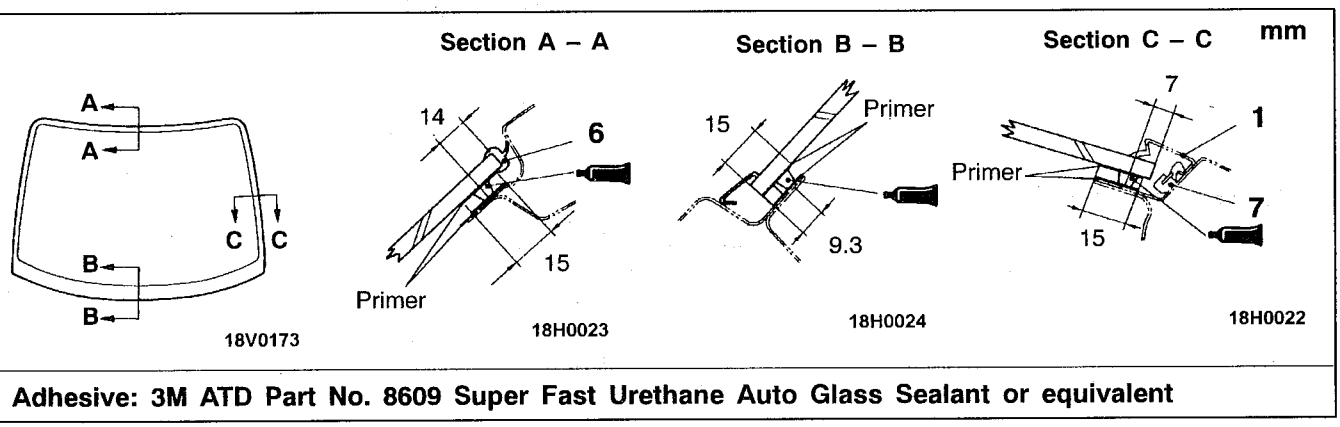

Adhesive: 3M ATD Part No. 8609 Super Fast Urethane Auto Glass Sealant or equivalent

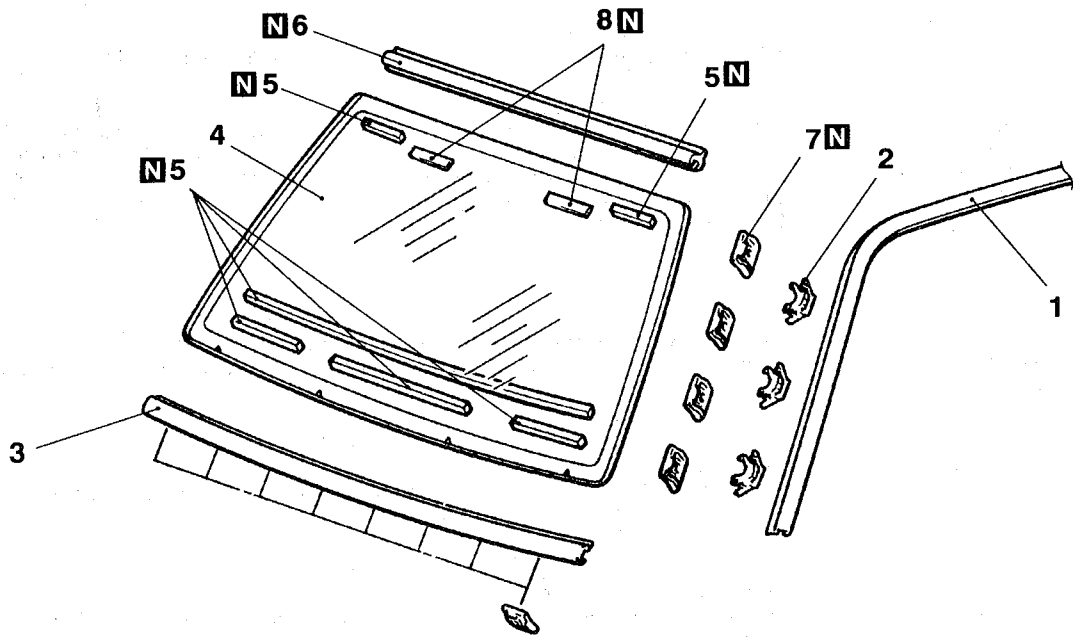

Removal steps

◀A▶ 1. Roof drip moulding (Refer to GROUP 51.)
2. Roof drip moulding clip
3. Windshield lower moulding
◀B▶ ▶A◀ 4. Windshield
▶A◀ 5. Windshield spacer
▶A◀ 6. Windshield upper moulding
▶A◀ 7. Clip
▶A◀ 8. Glass stopper

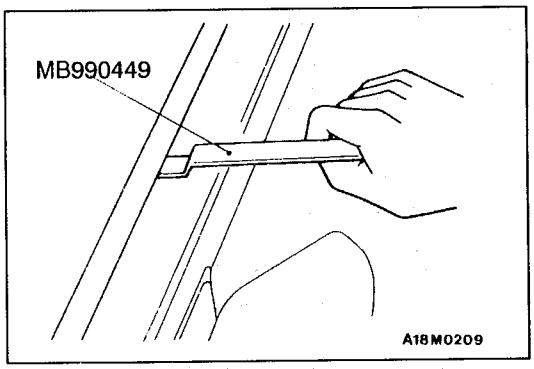

REMOVAL SERVICE POINTS

◀A▶ ROOF DRIP MOULDING REMOVAL

Use the special tool to lever out the moulding.

Caution
If the moulding has become warped, it should not be reused.

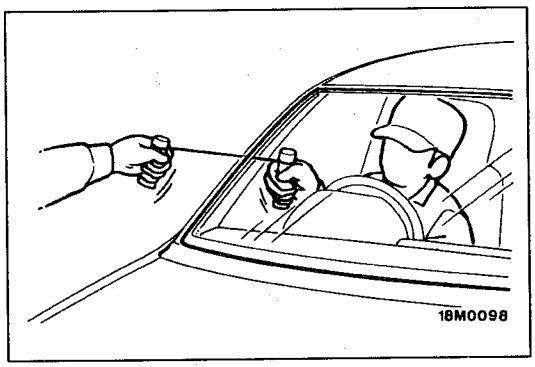

◀B▶ WINDSHIELD REMOVAL

1. In order to protect the body (paint surface), apply cloth tape to all body areas around the installed windshield.
2. Using a sharp-point drill, make hole in the windshield adhesive.
3. Pass the piano wire from the inside of the vehicle through the hole.
4. Pull the piano wire alternately from the inside and outside along the windshield to cut the adhesive.

   Caution
   Do not let the piano wire touch the edge of the windshield.

5. Make alignment marks on the windshield and body.
6. Use the special tool to remove the windshield.

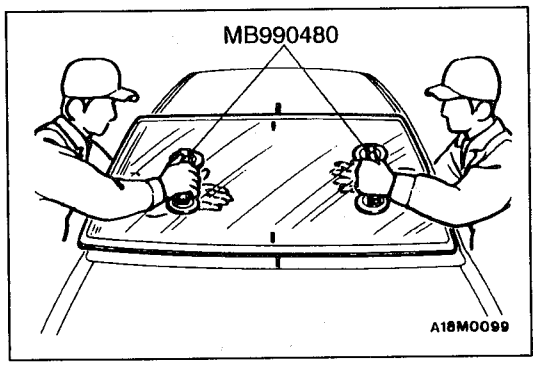

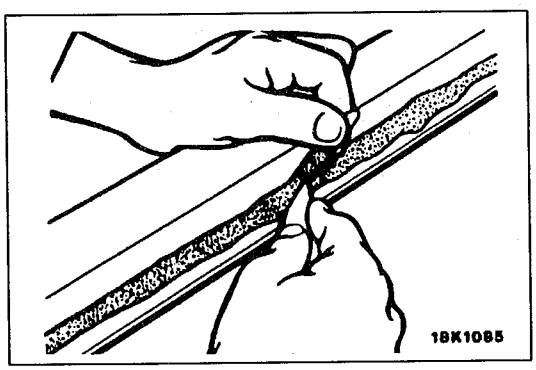

7. Use a knife to cut away remaining adhesive to 2 mm thick or less around the entire circumference of the body flange.
8. Smooth the flange surface.

   Caution
   (1) Use care not to remove more adhesive than necessary, or the adhesive could weaken.
   (2) Be careful also not to damage the paintwork on the body surface with the knife. If the paintwork is damaged, repair the damaged area with repair paint or anti-rust agent.

9. When reusing windshield, remove the remaining adhesive on the windshield completely. Then, decrease the windshield with isopropyl alcohol.
10. Decrease the body flange in the same way.

    Caution
    Before the next job, leave the decreased parts for 3 minutes or more to dry. Also, do not touch any cleaned surface.

INSTALLATION SERVICE POINTS

▶A◀ GLASS STOPPER/CLIP/WINDSHIELD UPPER MOULDING/WINDSHIELD SPACER/WINDSHIELD INSTALLATION

1. When installing new windshield, temporarily position the windshield on the body. Make alignment marks on the windshield and body.
2. Use isopropyl alcohol to degrease the inside of windshield circumference, and also the body flanges.
3. Apply primer soaked in a sponge evenly to the specified positions on the windshield and body flange.
4. Dry 3 minutes or more.
5. Install the glass stoppers and windshield spacers as shown to prevent the inside of windshield from warp or separation.

Glass stopper and windshield spacer installation position

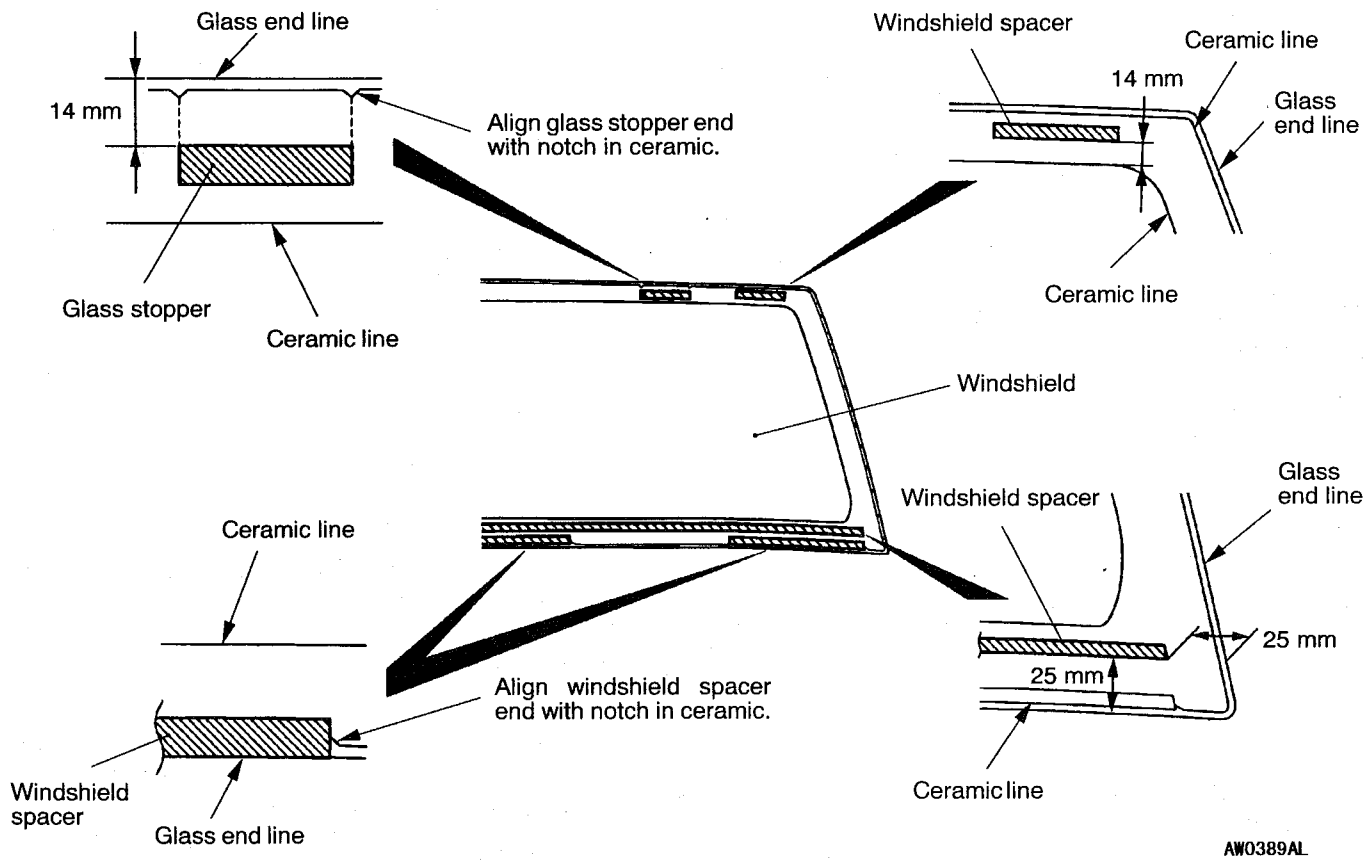

Caution

(1) Be sure to apply the primer to strengthen adhesion evenly around the entire position. Note that too thick application weakens the adhesion.

(2) Never touch the surfaces where the primer is applied.

6. Install the windshield upper moulding to the windshield.

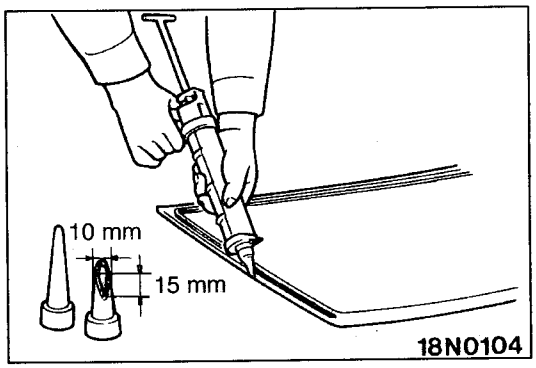

7. Fill a sealant gun with adhesive. Then apply the adhesive evenly around the windshield within 30 minutes after applying the primer.

   NOTE
   Cut the tip of the sealant gun nozzle into a V shape to simplify adhesive application.

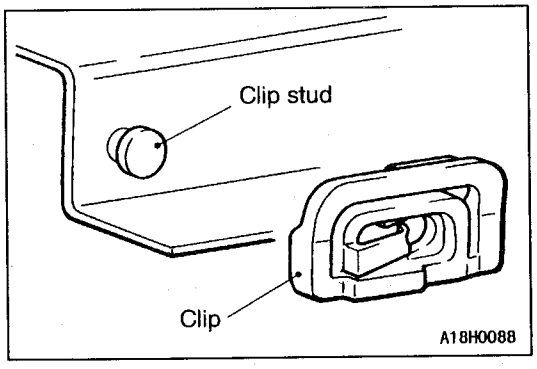

8. Install the clip to the clip stud.
9. After applying the adhesive, align the alignment marks on the windshield and body. Then, press the windshield gently to seat.
10. Use a spatula or the like to remove any excessive adhesive. Then clean the surface with isopropyl alcohol. Install the windshield moulding before the adhesive hardens.
11. Wait 30 minutes or more, and then test for water leakage.

    Caution
    (1) Do not move the vehicle unless necessary. If doing so, move it very gently.
    (2) When testing for water leakage, do not pinch the end of the hose to spray the water.

QUARTER WINDOW GLASS

REMOVAL AND INSTALLATION

Pre-removal and Post-installation Operation
- Quarter Trim, Lower (R.H.) Removal and Installation (Refer to GROUP 52A.)
- Headlining Removal and Installation

<3-door models>

mm

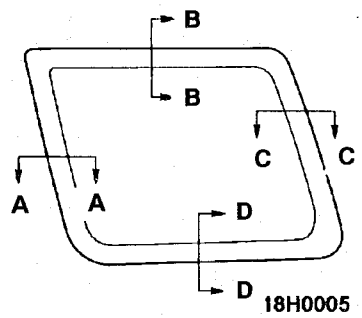

Section A – A

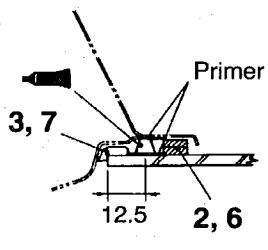

Section B – B

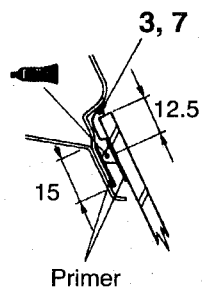

Section C – C

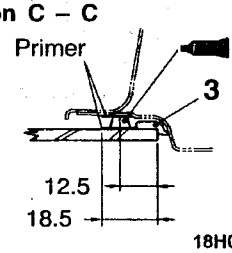

Section D – D

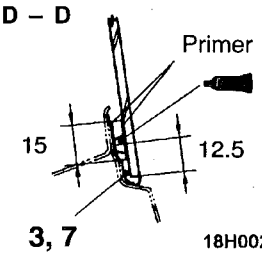

Adhesive: 3M ATD Part No. 8609 Super Fast Urethane Auto Glass Sealant or equivalent

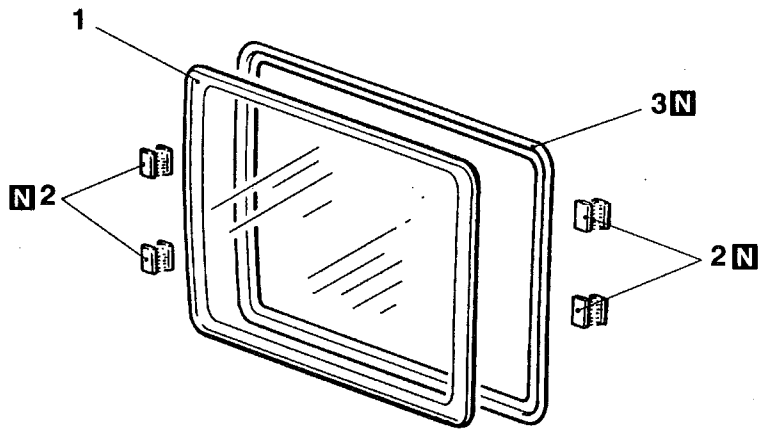

W0390AL
00008893

W0390AL

Removal steps

◀A▶ ▶A◀ 1. Quarter window glass
▶A◀ 2. Dual lock fastener
▶A◀ 3. Window dam

<5-door models>

mm

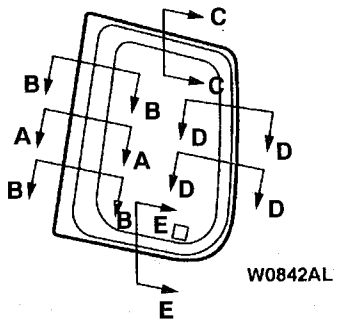

W0842AL

Section B – B

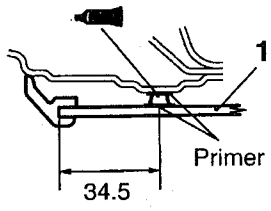

W0845AL

Section C – C

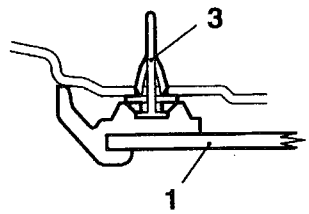

W0843AL

Section A – A

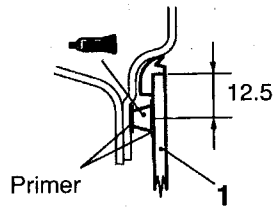

W0847AL

Section D – D

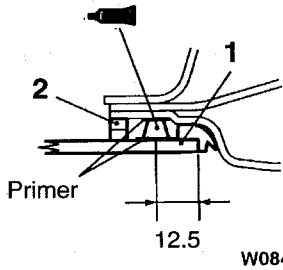

W0846AL

Section E – E

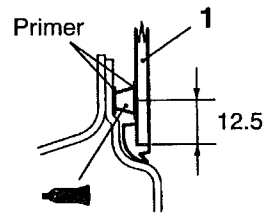

W0844AL

Adhesive: 3M ATD Part No. 8609 Super Fast Urethane Auto Glass Sealant or equivalent

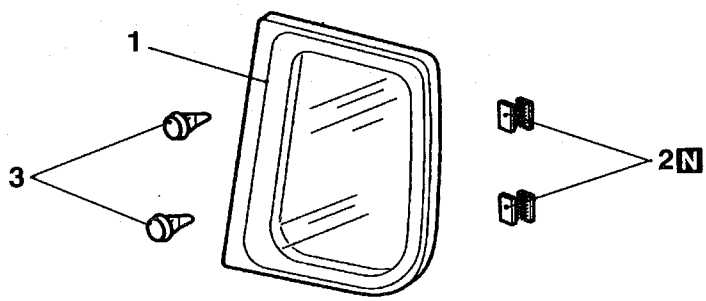

W0848AL
00009322

W0390AL

Removal steps

◀A▶ ▶A◀ 1. Quarter window glass
▶A◀ 2. Dual lock fastener
3. Clip

REMOVAL SERVICE POINT

◀A▶ QUARTER WINDOW GLASS REMOVAL

Remove the quarter window glass in the same manner as for the windshild. (Refer to P.42-11.)

INSTALLATION SERVICE POINT

▶A◀ WINDOW DAM/DUAL LOCK FASTENER/ QUARTER WINDOW GLASS INSTALLATION

1. Use a isopropyl alcohol to decrease the glass and body surfaces where the window dam and dual lock fasteners are installed.
2. Install the window dam.

Dual lock fastener installation positions

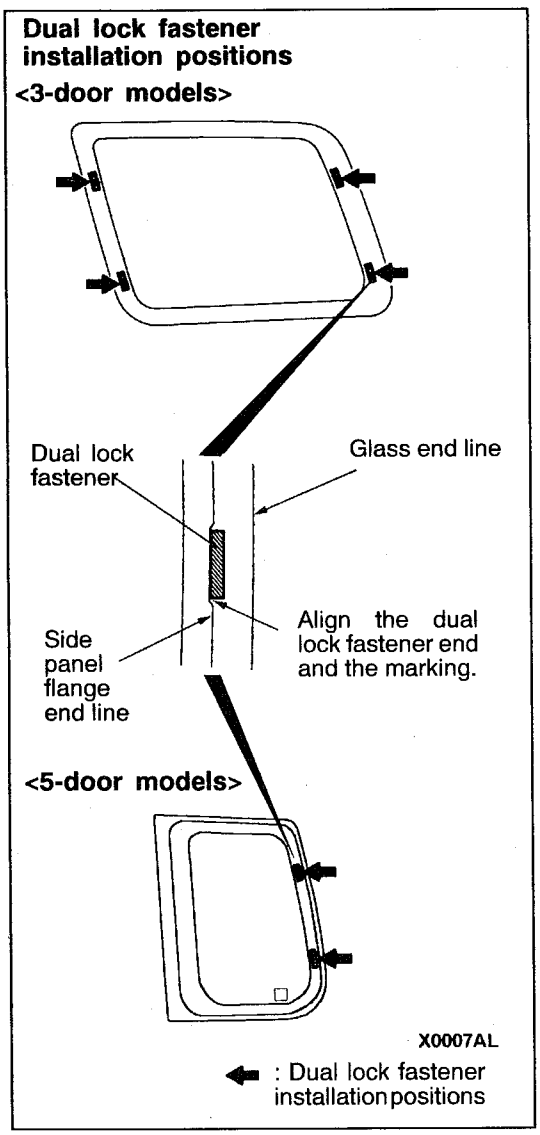

3. Install the dual lock fasteners to the body flange in the specified positions.
4. Install the dual lock fasteners to the windshield in the positions corresponding to the ones on the body flange where the dual lock fasteners have been installed.
5. Apply the primer and adhesive.
6. Install the glass in the same manner as for the windshield. (Refer to P.42-12.)

BACK DOOR GLASS

REMOVAL AND INSTALLATION

Pre-removal and Post-installation Operation
- High-mounted Stop Lamp Assembly Removal and Installation (Refer to GROUP 52A.)
- Back Door Trim Removal and Installation (Refer to P.42-62.)

mm

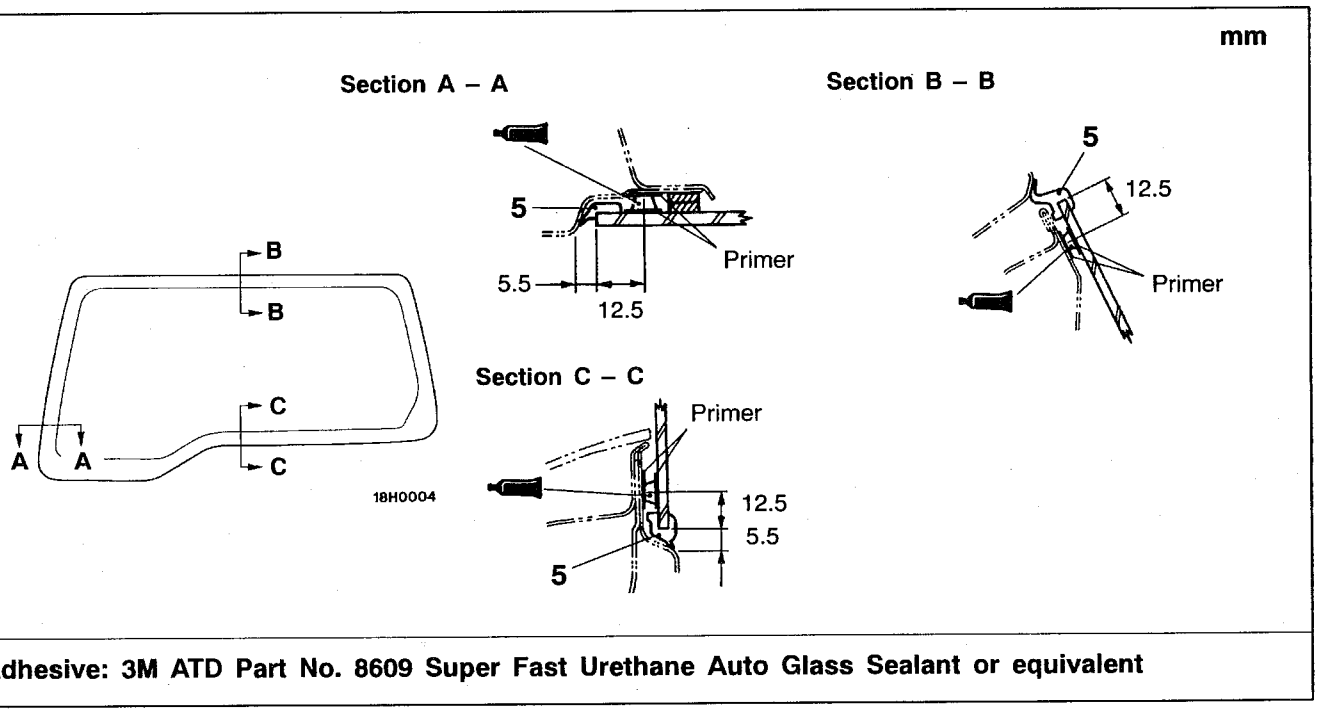

Adhesive: 3M ATD Part No. 8609 Super Fast Urethane Auto Glass Sealant or equivalent

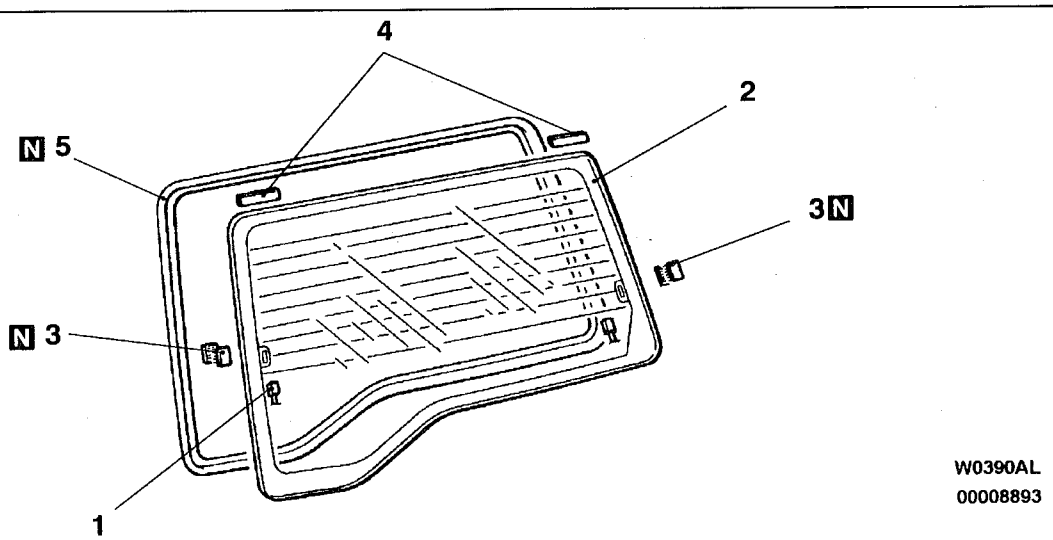

Removal steps

◀A▶ ▶A◀ 1. Harness connector
▶A◀ 2. Back door glass
▶A◀ 3. Dual lock fastener
▶A◀ 4. Glass stopper
▶A◀ 5. Window dam

REMOVAL SERVICE POINT

◀A▶ BACK DOOR GLASS REMOVAL

Remove the back door glass in the same manner as for the windshield. (Refer to P42-11.)

INSTALLATION SERVICE POINT

▶A◀ WINDOW DAM/DUAL LOCK FASTENER/GLASS STOPPER/BACK DOOR GLASS INSTALLATION

1. Use a isopropyl alcohol to decrease the glass and body surfaces where the window dam, dual lock fasteners and glass stoppers are installed.
2. Install the window dam.

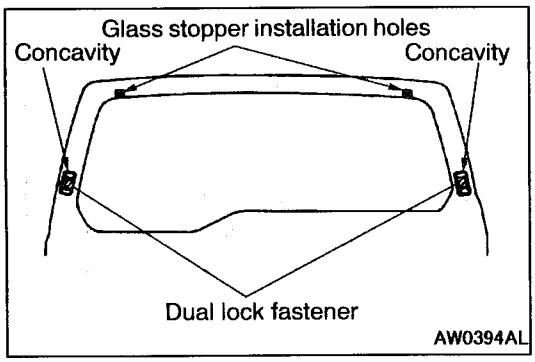

3. Install the dual lock fasteners to the concavities on the body panel and the glass stoppers to the hole on the body panel respectively.
4. Install the dual lock fasteners to the windshield in the positions corresponding to the ones on the body panel where the dual lock fasteners have been installed.
5. Apply the primer and adhesive.
6. Install the glass in the same manner as for the windshield. (Refer to P.42-12.)

DOOR

SERVICE SPECIFICATIONS

Items			Standard value
Door outside handle play mm			3.7 or more
Power window operating current A			5.3 ± 2 (power supply 14.5 V ± 0.3 V at 23°C)
Door inside handle play mm			5.3 or more
Glass pad and glass holder installation position <3-door models> mm	Between glass holder and glass rear end (A)		55.0
	Between glass holders (B)		419.0 – 421.0
	Between glass holder and glass front end (C)		55.0
Glass pad and glass holder installation position <5-door models> mm	Between glass holder and glass rear end	Front	50.0
		Rear	–
	Between glass holders	Front	419.0 – 421.0
		Rear	–
	Between glass holder and glass front end	Front	50.0
		Rear	32.0

SEALANT

Items	Specified sealant	Remark
Waterproof film	3M ATD Part No. 8625 or equivalent	Ribbon sealer

SPECIAL TOOLS

Tool	Number	Name	Use
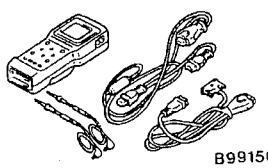 B991502	MB991502	MUT-II sub assembly	Center door lock system check (ETACS-ECU input signal check)
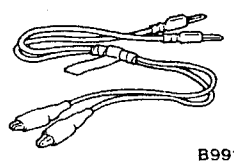 B991529	MB991529	Diagnosis code check harness	ETACS-ECU input signal check when voltmeter is used
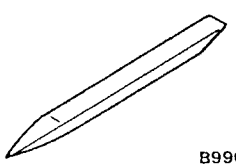 B990784	MB990784	Ornament remover	Door trim removal

Tool	Number	Name	Use
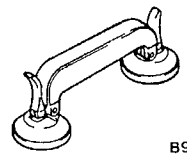 B990480	MB990480	Window glass holder	Power window regulator and motor assembly removal
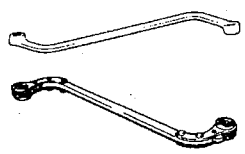 00003936	MB990900 or MB991164	Door hinge adjusting wrench	Adjustment of door fit
A 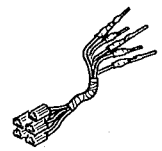 B 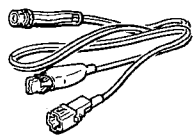 C 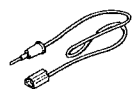 D  C991223	MB991223 A: MB991219 B: MB991220 C: MB991221 D: MB991222	Harness set A: Test harness B: LED harness C: LED harness adapter D: Probe	Terminal voltage measurement A: Connector pin contact pressure check B: Power circuit check C: Power circuit check D: Commercial tester connection

TROUBLESHOOTING

DIAGNOSIS FUNCTION

INPUT SIGNAL CHECK POINTS <VEHICLES WITH ETACS-ECU>

1. Connect the MUT-II or a voltmeter to the diagnosis connector to check input signal. (Refer to GROUP 00 – How to Use Troubleshooting/Inspection Service Points.)
2. The following input signals can be checked:
   Door lock antuator
   - LOCK
   - UNLOCK

   NOTE
   If all the input signals cannot be check by using the MUT-II, the diagnosis circuit may be defective.

INSPECTION CHART FOR TROUBLE SYMPTOMS

POWER WINDOWS

Symptom		Inspection procedure	Reference page
None of power window switches can operate any of windows.		1	42-22
Power window main switch can not operate any of windows. (However, each power window sub-switch can operate window.)	Vehicles except for Hong Kong	2	42-23
	Vehicles for Hong Kong	3	42-24
Power window main switch can not operate driver's window. (However, power window main switch can operate window except driver's window.)	Vehicles except for Hong Kong	4	42-25
	Vehicles for Hong Kong	5	42-25
Power window main switch can not operate passenger's window. (However, passenger's power window sub-switch can operate passenger's window.)	Vehicles except for Hong Kong	6	42-26
	Vehicles for Hong Kong	7	42-26
Power window main switch can not operate rear door windows. (However, rear power window sub-switches can operate rear door windows.)	Vehicles except for Hong Kong	8	42-27
	Vehicles for Hong Kong	9	42-27
Passenger's power window sub-switch can not operate passenger's window. (However, power window main switch can operate passenger's window.)	Vehicles except for Hong Kong	10	42-28
	Vehicles for Hong Kong	11	42-29
Rear power window sub-switches can not operate rear door windows. (However, power window main switch can operate rear door windows.)	Vehicles except for Hong Kong	12	42-30
	Vehicles for Hong Kong	13	42-31

DOOR LOCKING MECHANISM

Symptom		Inspection procedure	Reference page
None of door lock/unlock functions operate with driver's inside lock knob (ignition key also).	Vehicles without keyless entry system	14	42-32
	Vehicles with keyless entry system	15	42-33
Lock/unlock functions of some doors do not operate.	L.H. drive vehicles	16	42-34
	R.H. drive vehicles	17	42-34

INSPECTION PROCEDURE FOR TROUBLE SYMPTOMS

Inspection Procedure 1

None of power window switches can operate any of windows.	Probable cause
Power window relay, power window relay drive circuit or ETACS-ECU may be defective.	• Malfunction of power window relay • Malfunction of ETACS-ECU • Malfunction of junction block • Malfunction of wiring harness or connector

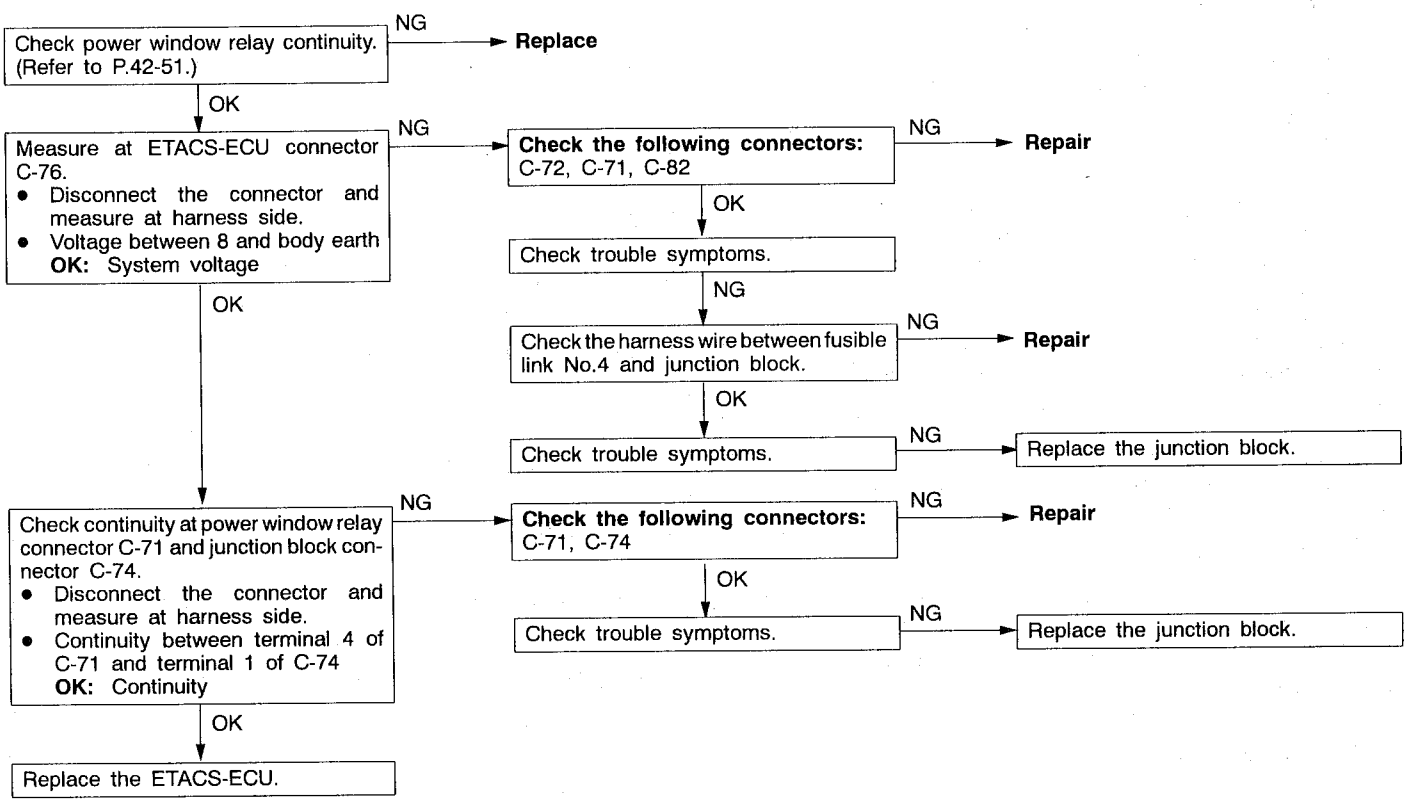

Inspection Procedure 2

Power window main switch can not operate any of windows. (However, each power window sub-switch can operate window.) <Vehicles except for Hong Kong>	Probable cause
Power window main switch or its power supply circuit or earth circuit may be defective.	• Malfunction of power window main switch • Malfunction of wiring harness or connector

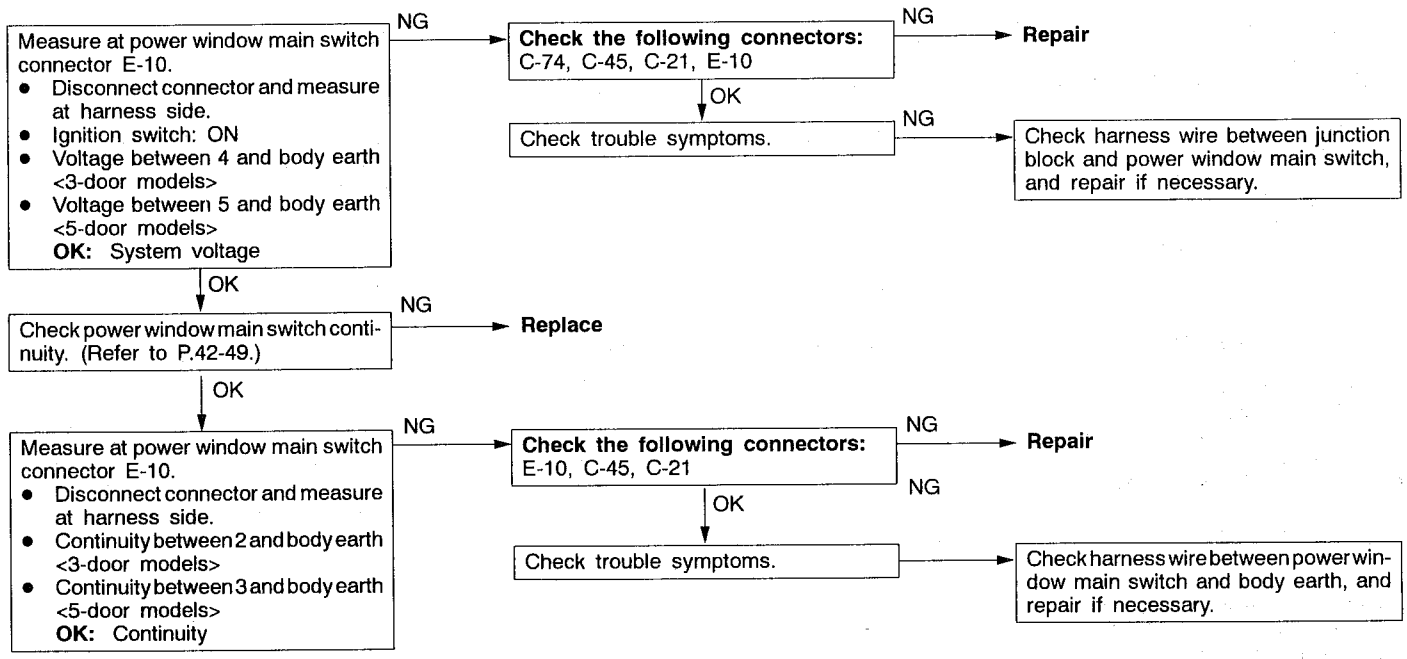

Inspection Procedure 3

Power window main switch can not operate any of windows. (However, each power window sub-switch can operate window.) <Vehicles for Hong Kong>	Probable cause
Power window main switch or its power supply circuit or earth circuit may be defective.	• Malfunction of power window main switch • Malfunction of wiring harness or connector

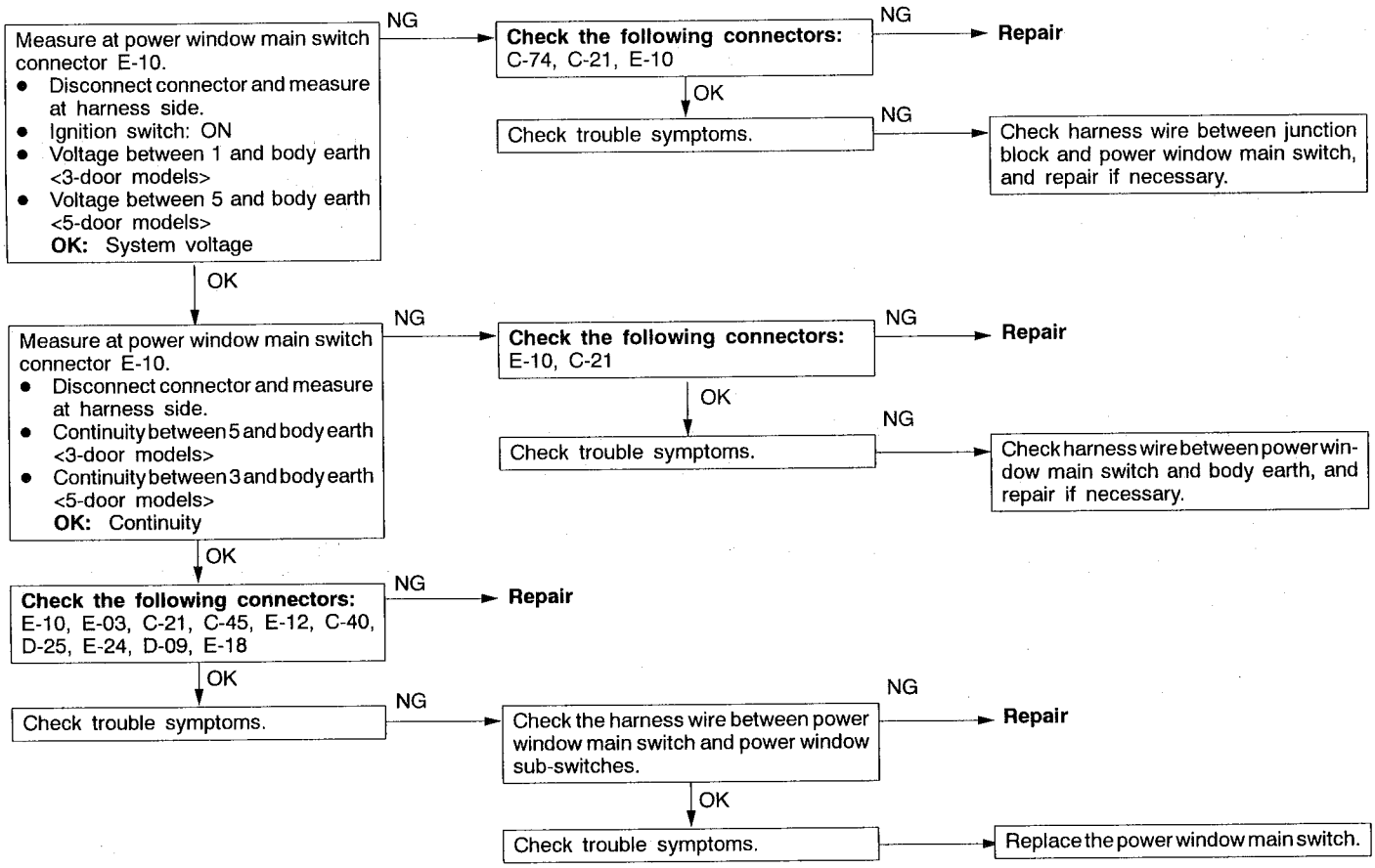

Inspection Procedure 4

Power window main switch can not operate driver's window. (However, power window main switch can operate window except driver's window.) <Vehicles except for Hong Kong>	Probable cause
Power window main switch, power window motor, or harness or connector between power window main switch and power window motor may be defective.	• Malfunction of power window main switch • Malfunction of power window motor • Malfunction of wiring harness or connector

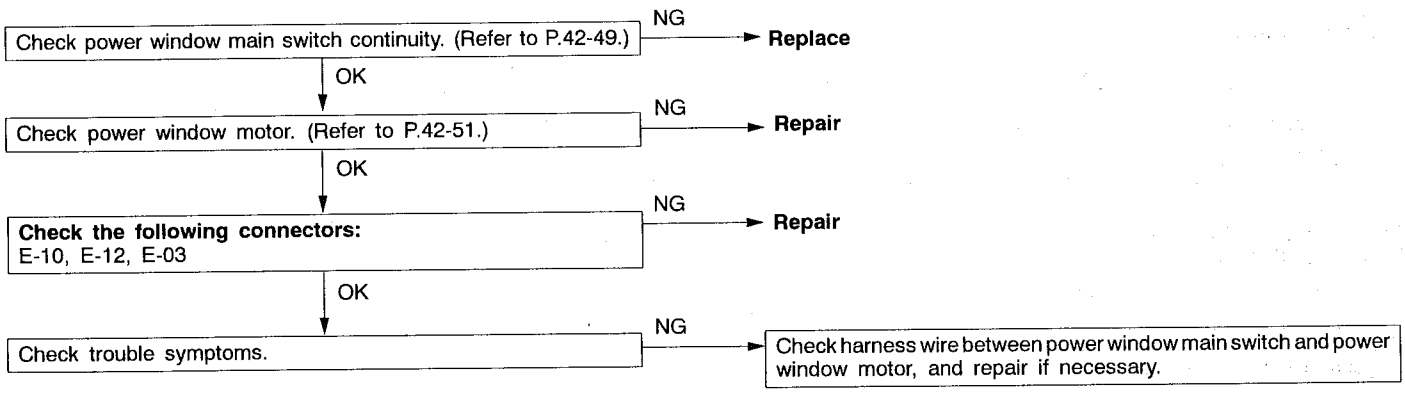

Inspection Procedure 5

Power window main switch can not operate driver's window. (However, power window main switch can operate window except driver's window.) <Vehicles for Hong Kong>	Probable cause
Power window main switch, power window motor (driver's power window), or harness or connector between power window main switch and power window motor (driver's power window) may be defective.	• Malfunction of power window main switch • Malfunction of power window motor (driver's power window) • Malfunction of wiring harness or connector

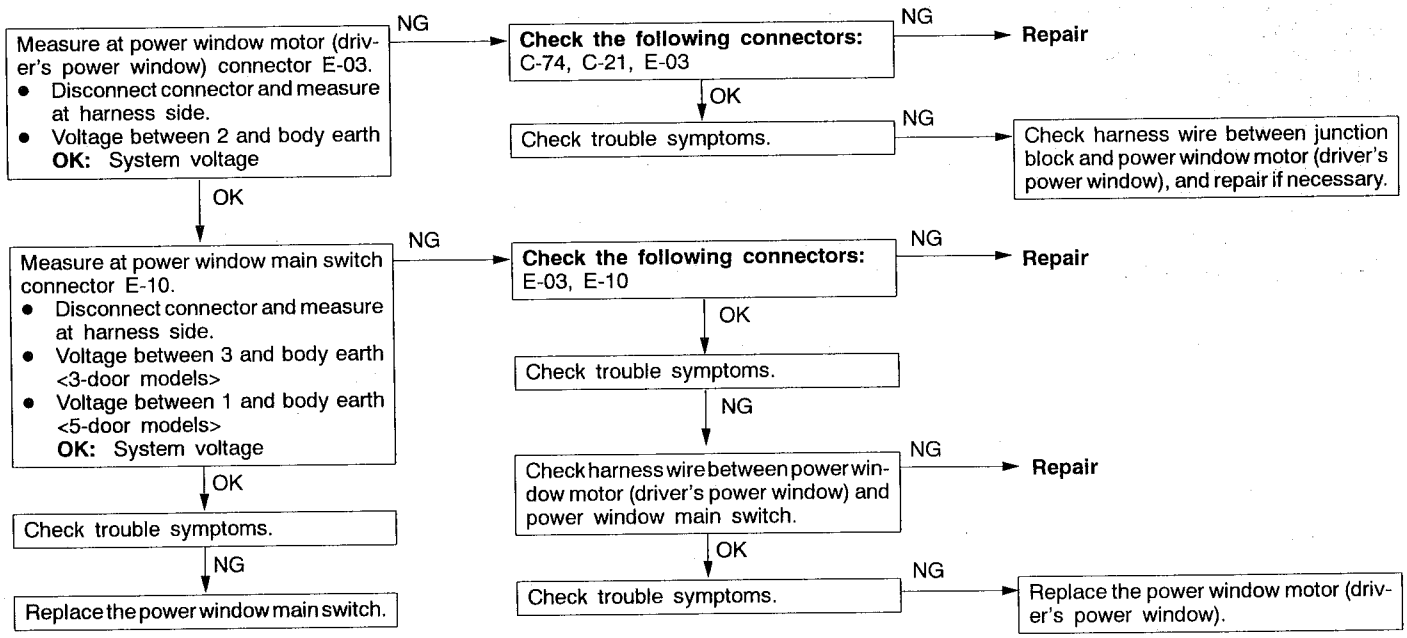

Inspection Procedure 6

Power window main switch can not operate passenger's window. (However, passenger's power window sub-switch can operate passenger's window.) <Vehicles except for Hong Kong>	Probable cause
There may be short circuit or open circuit in communication line from the power window main switch to passenger's power window sub-switch, or passenger's power window sub-switch or power window main switch may be defective.	• Malfunction of power window main switch • Malfunction of passenger's power window sub-switch • Malfunction of wiring harness or connector

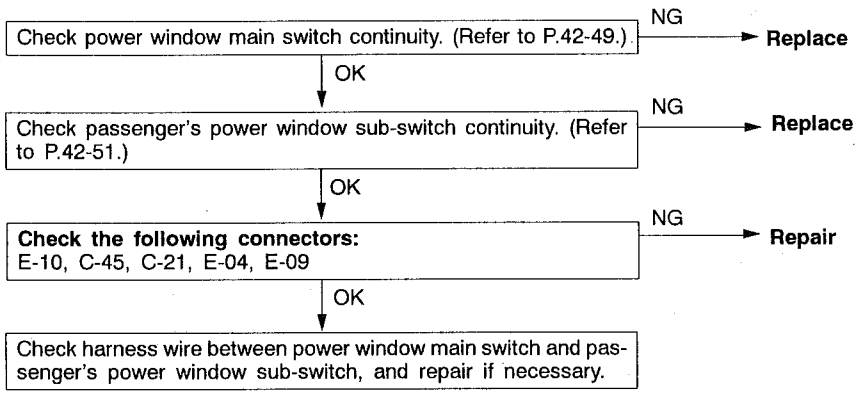

Inspection Procedure 7

Power window main switch can not operate passenger's window. (However, passenger's power window sub-switch can operate passenger's window.) <Vehicles for Hong Kong>	Probable cause
There may be short circuit or open circuit in communication line from the power window main switch to passenger's power window motor, or passenger's power window motor or power window main switch may be defective.	• Malfunction of power window main switch • Malfunction of passenger's power window motor • Malfunction of wiring harness or connector

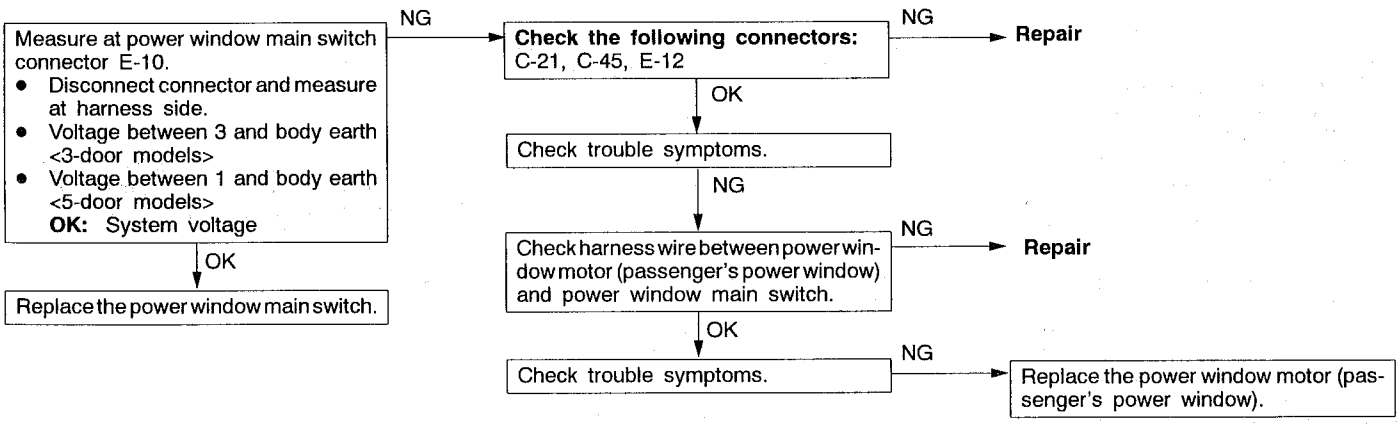

Inspection Procedure 8

Power window main switch can not operate rear door windows. (However, rear power window sub-switches can operate rear door windows.) <Vehicles except for Hong Kong>	Probable cause
There may be short circuit or open circuit in communication line from the power window main switch to rear power window sub-switch, or rear power window sub-switch or power window main switch may be defective.	• Malfunction of power window main switch • Malfunction of rear power window sub-switch • Malfunction of wiring harness or connector

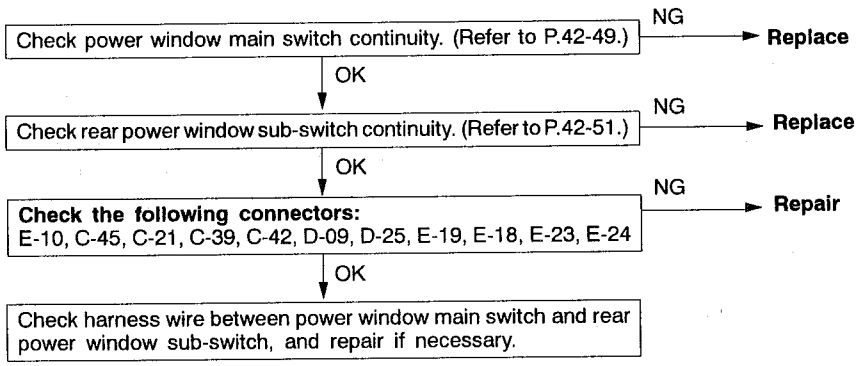

Inspection Procedure 9

Power window main switch can not operate rear door windows. (However, rear power window sub-switches can operate rear door windows.) <Vehicles for Hong Kong>	Probable cause
There may be short circuit or open circuit in communication line from the power window main switch to rear power window motor, or rear power window motor or power window main switch may be defective.	• Malfunction of power window main switch • Malfunction of rear power window motor • Malfunction of wiring harness or connector

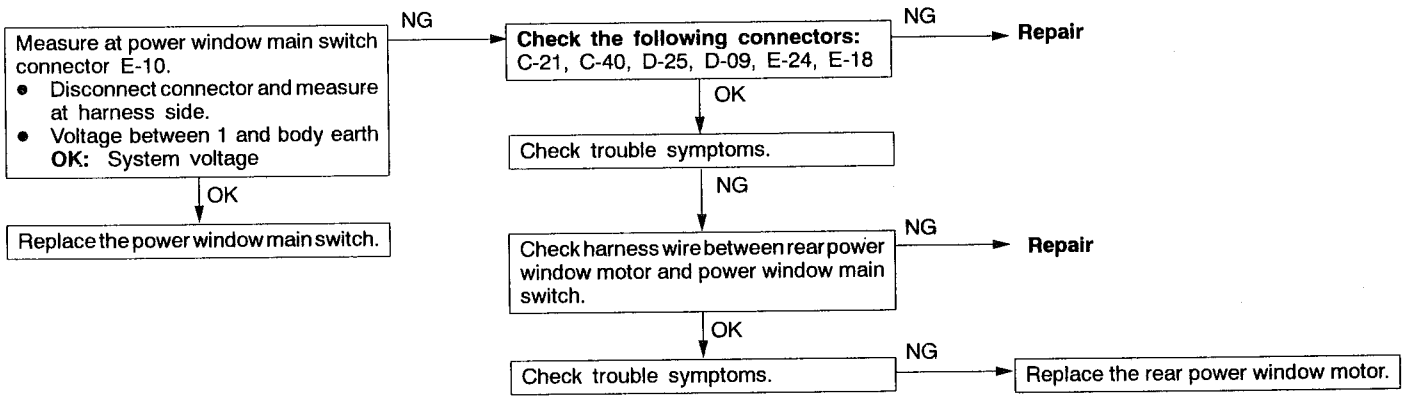

Inspection Procedure 10

Passenger's power window sub-switch can not operate passenger's window. (However, power window main switch can operate passenger's window.) <Vehicles except for Hong Kong>	Probable cause
Power supply circuit or earth circuit of the passenger's power window sub-switch, passenger's power window sub-switch or passenger's power window motor may be defective.	• Malfunction of passenger's power window sub-switch • Malfunction of passenger's power window motor • Malfunction of wiring harness or connector

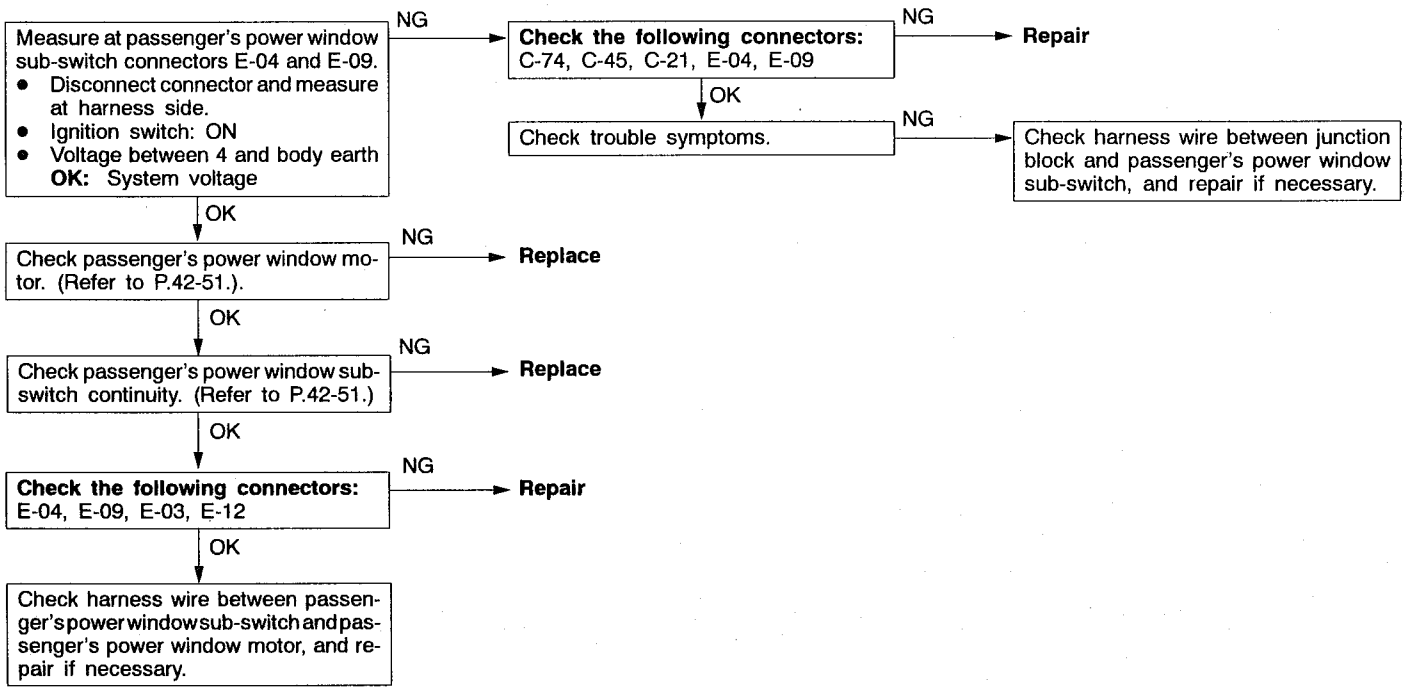

Inspection Procedure 11

Passenger's power window sub-switch can not operate passenger's window. (However, power window main switch can operate passenger's window.) <Vehicles for Hong Kong>	Probable cause
Power supply circuit or earth circuit of the passenger's power window motor, passenger's power window motor or passenger's power window sub-switch may be defective.	• Malfunction of passenger's power window sub-switch • Malfunction of passenger's power window motor • Malfunction of wiring harness or connector

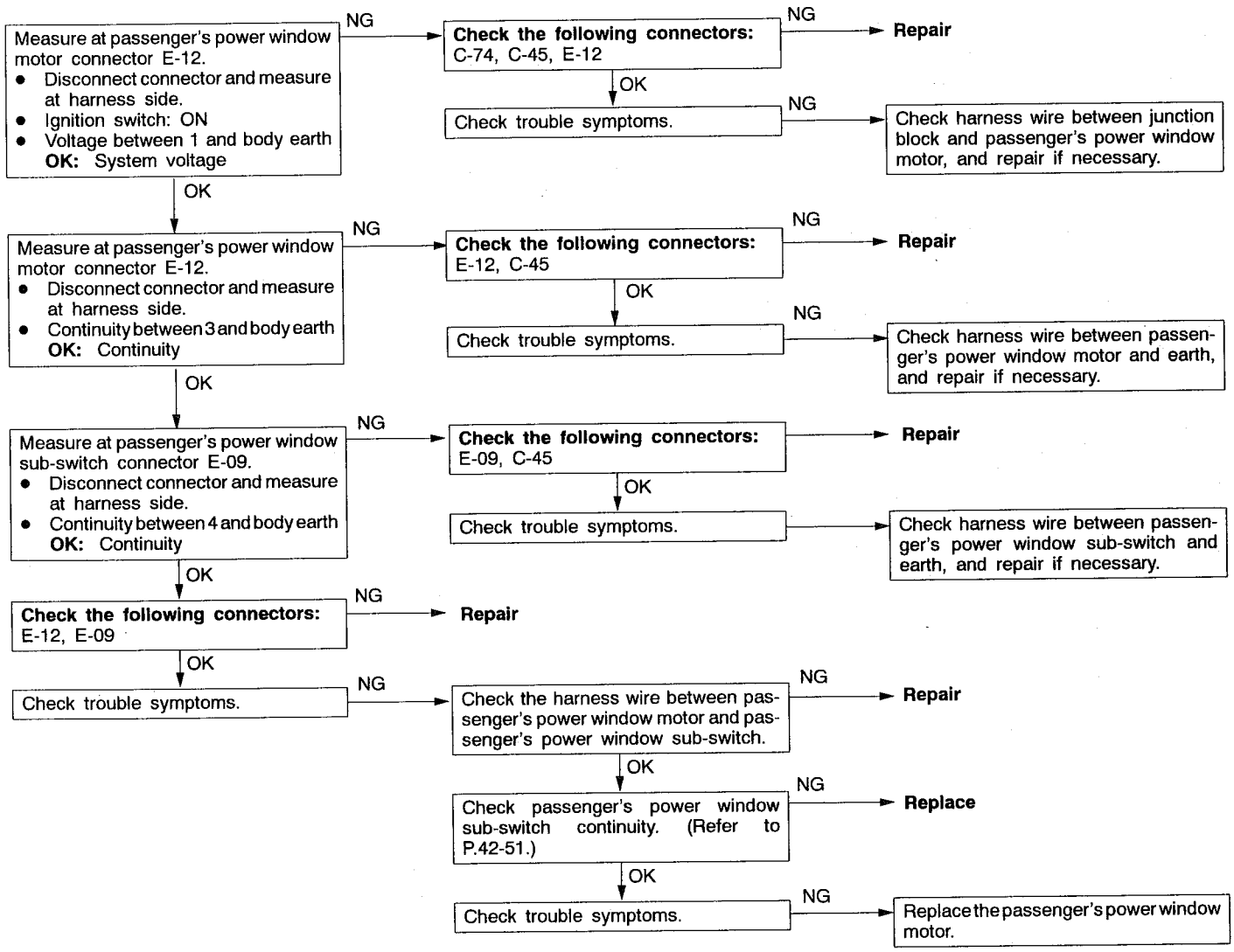

Inspection Procedure 12

Rear power window sub-switches can not operate rear door windows. (However, power window main switch can operate rear door windows.) <Vehicles except for Hong Kong>	Probable cause
Power supply circuit or earth circuit of the rear power window sub-switches, rear power window sub-switches or rear power window motors may be defective.	• Malfunction of rear power window sub-switches • Malfunction of rear power window motors • Malfunction of wiring harness or connector

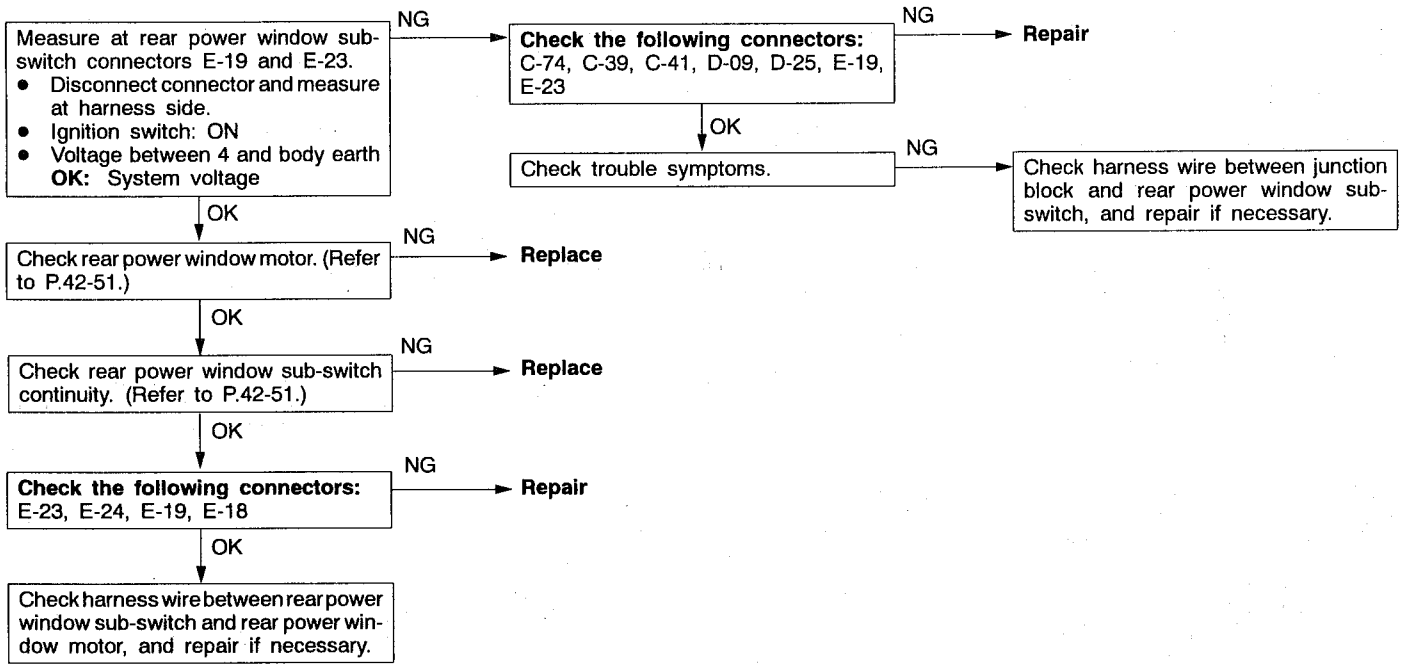

Inspection Procedure 13

Rear power window sub-switches can not operate rear door windows. (However, power window main switch can operate rear door windows.) <Vehicles for Hong Kong>	Probable cause
Power supply circuit or earth circuit of the rear power window motor, rear power window motor or rear power window sub-switches may be defective.	• Malfunction of rear power window sub-switches • Malfunction of rear power window motors • Malfunction of wiring harness or connector

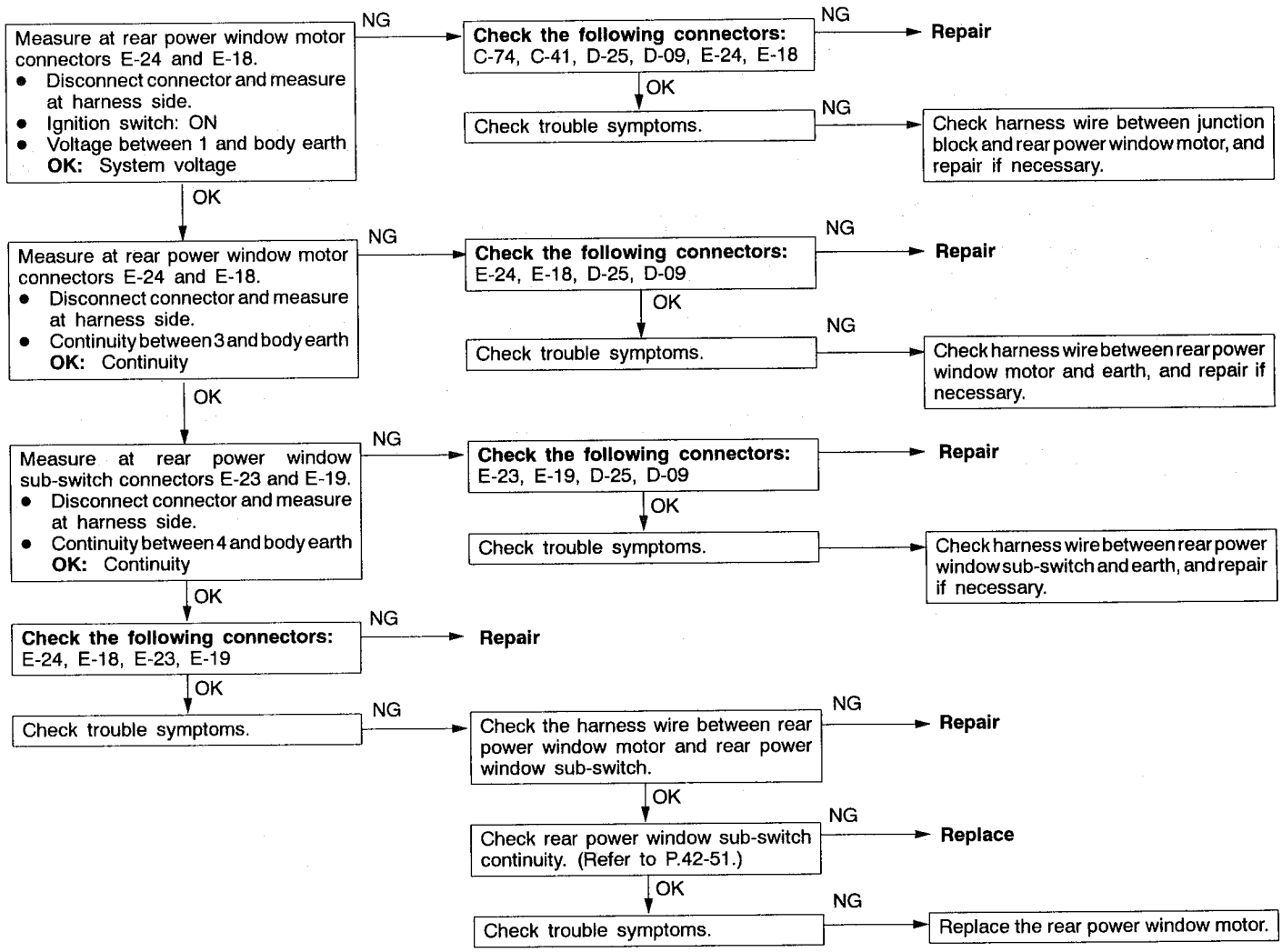

Inspection Procedure 14

None of door lock/unlock functions operate with driver's inside lock knob (ignition key also). <Vehicles without keyless entry system>	Probable cause
Front door latch switch, ETACS-ECU, harness or connector may be defective.	• Malfunction of front door latch switch • Malfunction of ETACS-ECU • Malfunction of wiring harness or connector

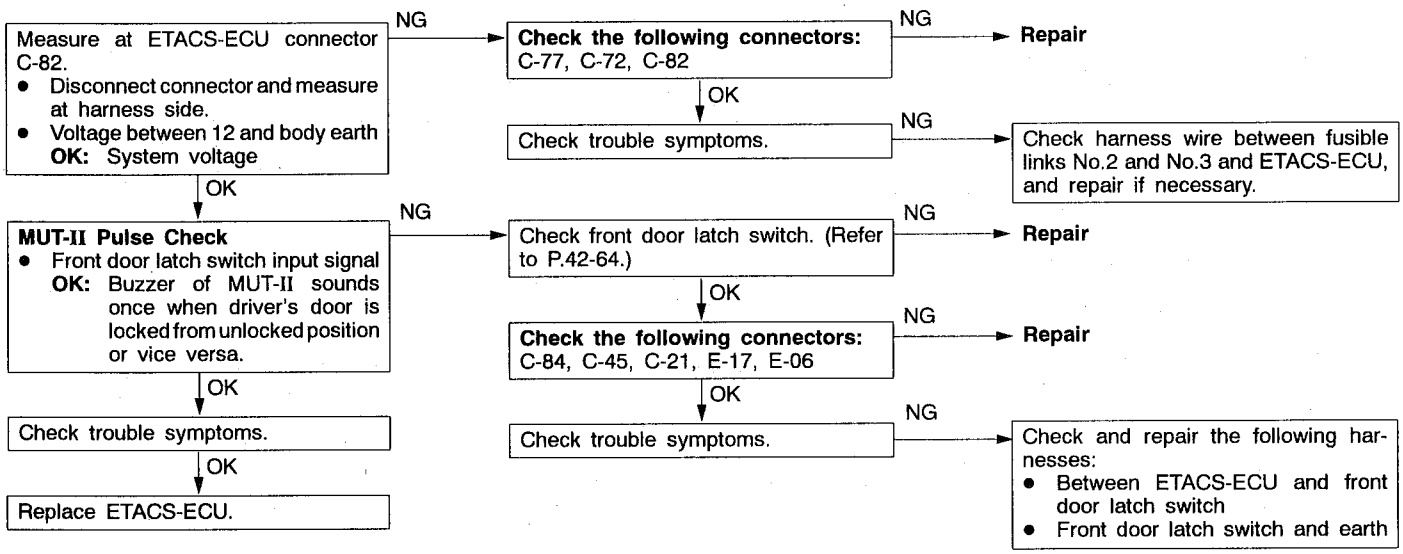

Inspection Procedure 15

None of door lock/unlock functions operate with driver's inside lock knob (ignition key also). <Vehicles with keyless entry system>	Probable cause
Front door lock actuator switch, ETACS-ECU, harness or connector may be defective.	• Malfunction of front door latch switch • Malfunction of front door lock actuator • Malfunction of ETACS-ECU • Malfunction of wiring harness or connector

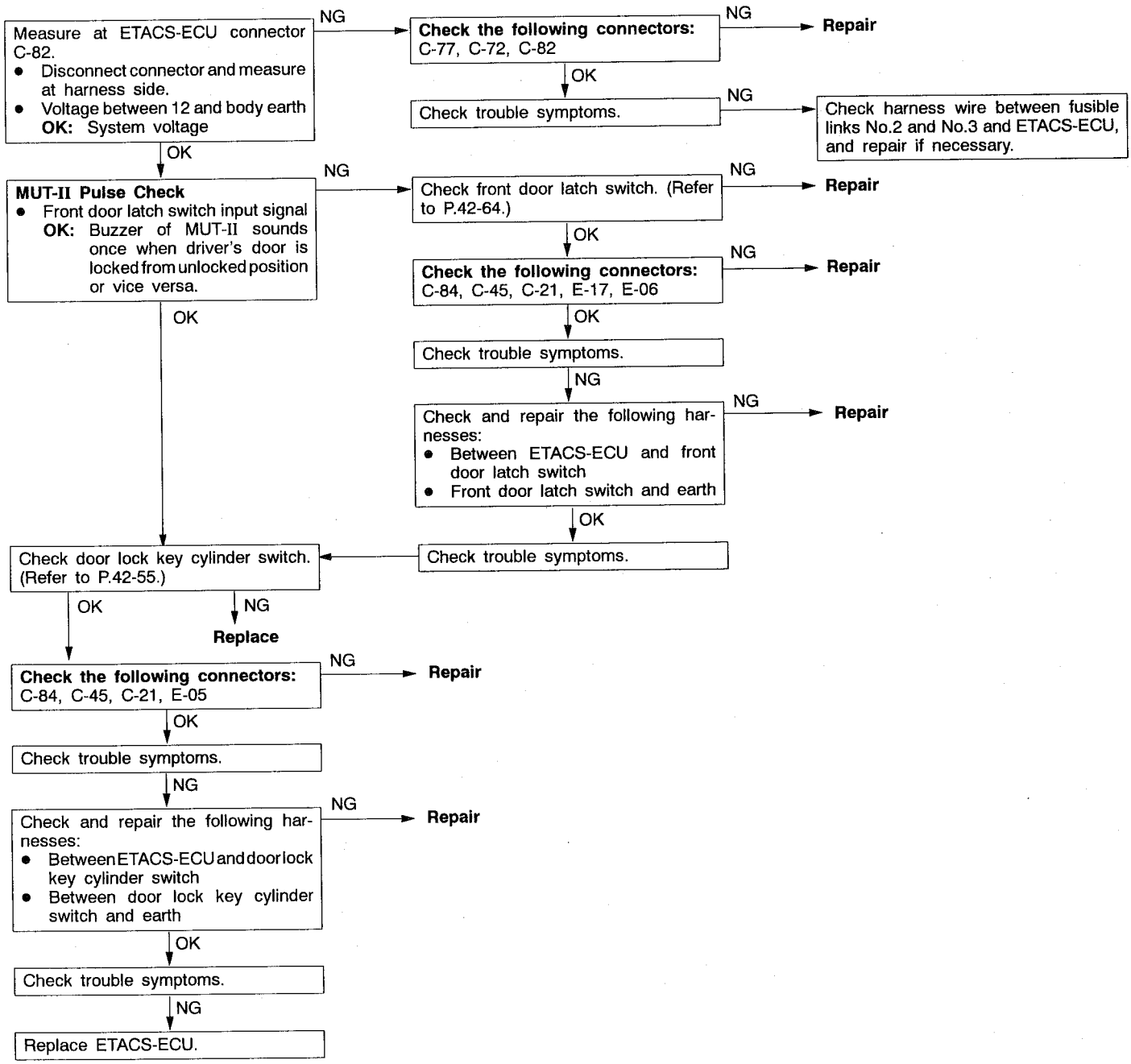

Inspection Procedure 16

Lock/unlock functions of some doors do not operate. <L.H. drive vehicles>	Probable cause
Door lock actuator, back door lock actuator, harness or connector may be defective.	• Malfunction of door lock actuator • Malfunction of back door lock actuator • Malfunction of wiring harness or connector

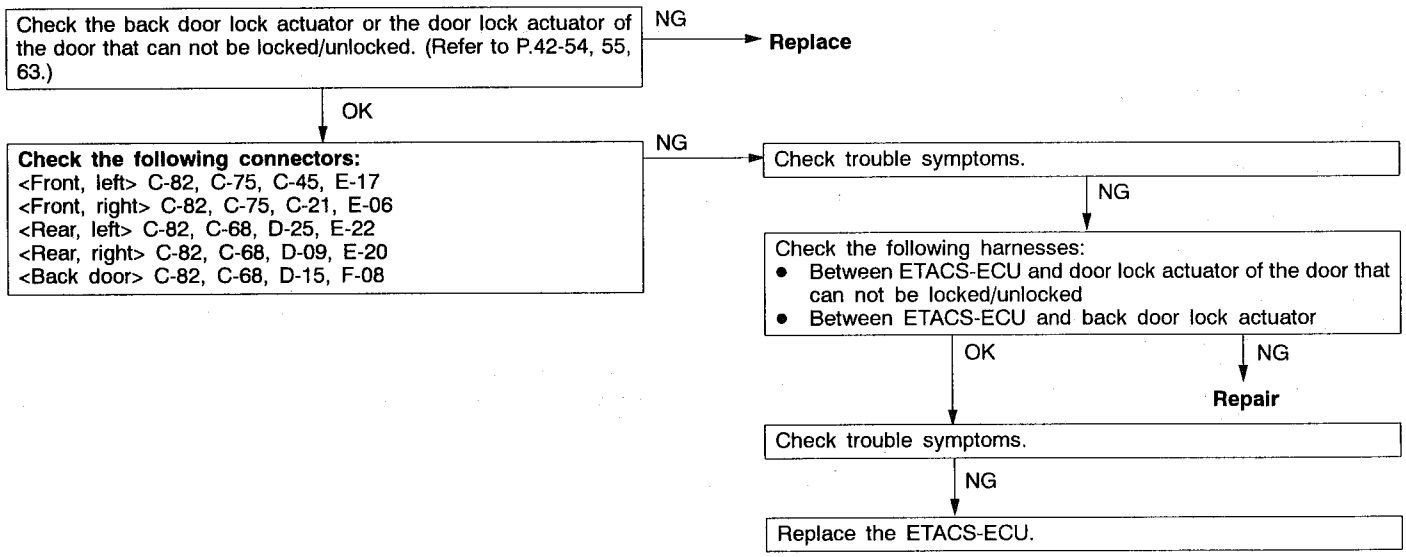

Inspection Procedure 17

Lock/unlock functions of some doors do not operate. <R.H. drive vehicles>	Probable cause
Door lock actuator, back door lock actuator, harness or connector may be defective.	• Malfunction of door lock actuator • Malfunction of back door lock actuator • Malfunction of wiring harness or connector

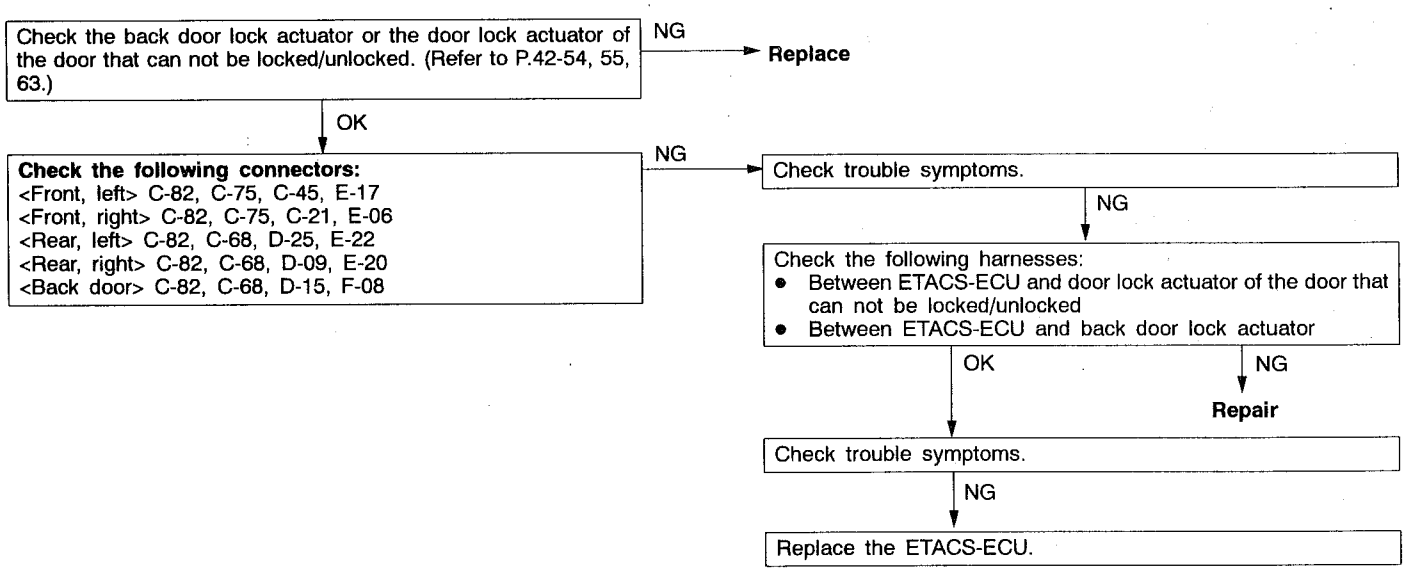

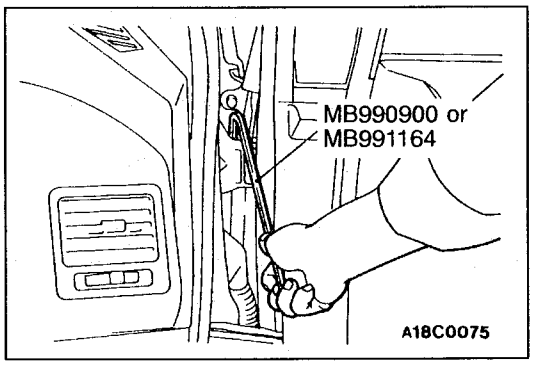

ON-VEHICLE SERVICE

DOOR FIT ADJUSTMENT

1. If clearance between the door and body is uneven, affix protective tape to the fender around the hinge and to the edge of the door. Then use the special tool to loosen the door hinge mounting bolts on the body, and adjust the clearance around the door so that it becomes even.
2. If the door and body are not flush with each other, use the special tool to loosen the door hinge mounting bolts on the door. Then align the door.

Caution
Do not load more than 98 Nm on the special tool.

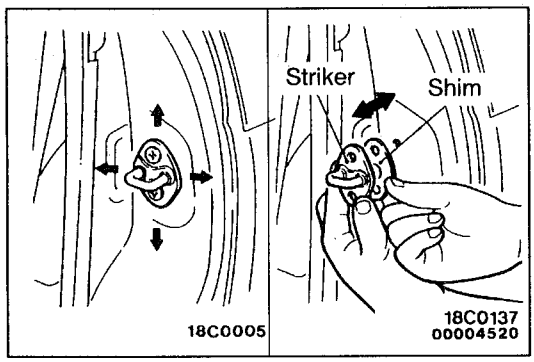

3. If the door opening and closing is heavy, adjust the meshing of the striker and the door latch (forward and backward) by adding shims to the striker and by moving the striker up and down or to the left and right.

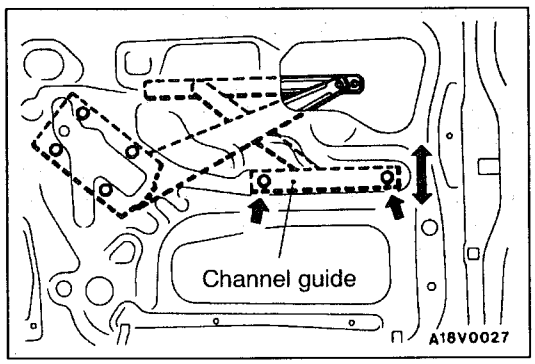

DOOR WINDOW GLASS ADJUSTMENT

Check that the door glass moves securely along the door glass runchannel when the window glass is fully raised and fully lowered. If the glass does not move correctly, adjust as follows:

1. Remove the door trim and the waterproof film. (Refer to P.42-40.)
2. Close the door window glass. Loosen the channel guide mounting bolts, and then adjust the inclination of glass.

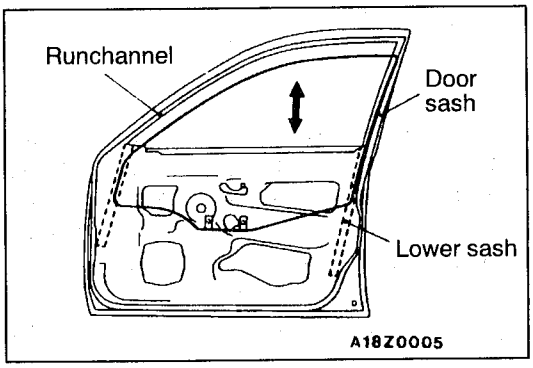

DEFECTIVE POWER WINDOW ADJUSTMENT AND REPLACEMENT

If the window glass wrongly, automatically lowers while being raised, adjust or replace as follows:

1. Remove the door trim and the waterproof film. (Refer to P.42-40.)
2. Remove the window regulator assembly from the door window glass, and then raise and lower the door window glass by hand to check the operation force.

   NOTE
   Insert soft stuff like cushion to prevent damage to the glass if it falls down.
3. If the door window glass does not move up and down smoothly, do as follows:
   - Check the installation condition of the runchannel.
   - Straighten twist in the door sash.
   - Check the installation condition of the lower sash or the center sash.

   NOTE
   The lower sash cannot normally be adjusted, but it may be possible to adjust the sash span slightly within the range allowed by manufacturing tolerances by pushing the lower sash outwards while re-installing it.
4. If repair or adjustment is impossible, replace the door assembly.

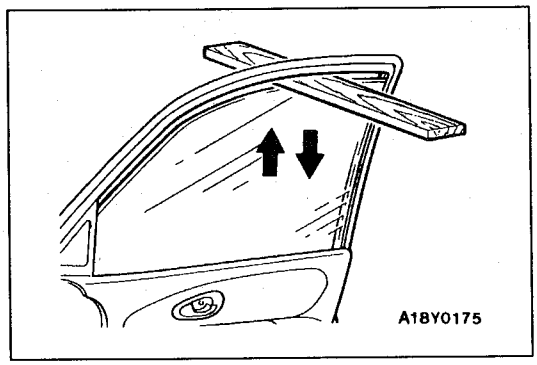

POWER WINDOW SAFETY MECHANISM CHECK

1. Place a wooden board about 10 mm thick as shown. Then, raise the window glass.
2. Check that the window lowers by about 150 mm when the window clamps the board. If this doesn't happen, do troubleshooting. (Refer to P.42-21.)

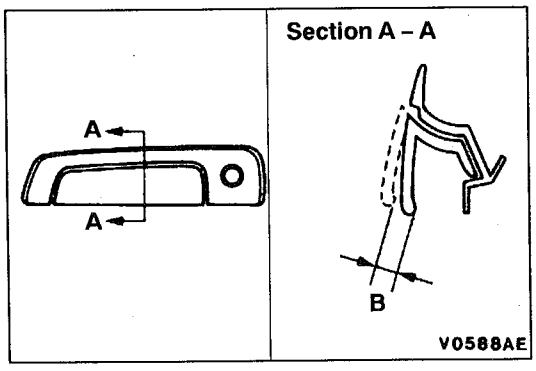

DOOR OUTSIDE HANDLE PLAY CHECK

1. Measure the door outside handle play.

   Standard value (B): 3.7 mm or more
2. If the play is not within the standard value, check the door outside handle or the door latch assembly. Replace, if necessary.

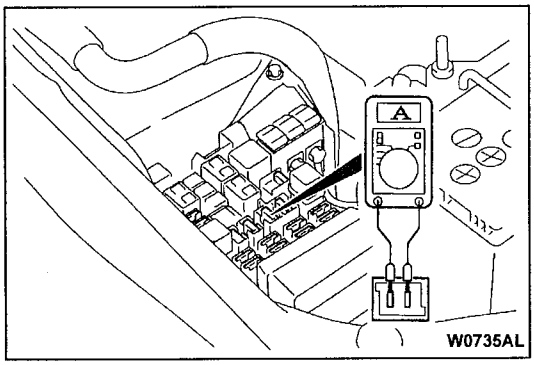

POWER WINDOW OPERATION CURRENT CHECK

1. Remove the power window fuse and connect a circuit tester as shown.
2. Measure the operation current. When the power window switch is turned to UP, much current flows at the beginning and end of the operation. So, measure the operation current in between these points.

   Standard value:
   5.3 ± 2 A (power supply voltage 14.5 ± 0.3 V at 23°C)
3. If the operation current is not within the standard value, do troubleshooting. (Refer to P.42-21.)

CIRCUIT BREAKER (INCORPORATED IN POWER WINDOW MOTOR) CHECK

1. Turn the power window switch to UP to close the window glass. Keep the switch at the fully-closed position for another 10 seconds.
2. Release the power window switch and immediately turn it to DOWN. Under this condition if the window glass starts to lower within 60 seconds, the circuit breaker can be judged good.

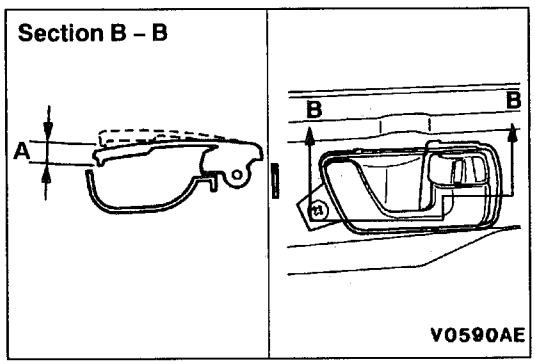

DOOR INSIDE HANDLE PLAY CHECK AND ADJUSTMENT

1. Measure the door inside handle play.

   Standard value (A): 5.3 mm or more
2. If the play is not within the standard value, remove the door trim. (REfer to P.42-40.)
3. Adjust the door inside handle play with the clip connecting the inside handle and the rod.

DOOR ASSEMBLY

REMOVAL AND INSTALLATION

Post-installation Operation
Door Fit Adjustment (Refer to P.42-35.)

<FRONT DOOR>

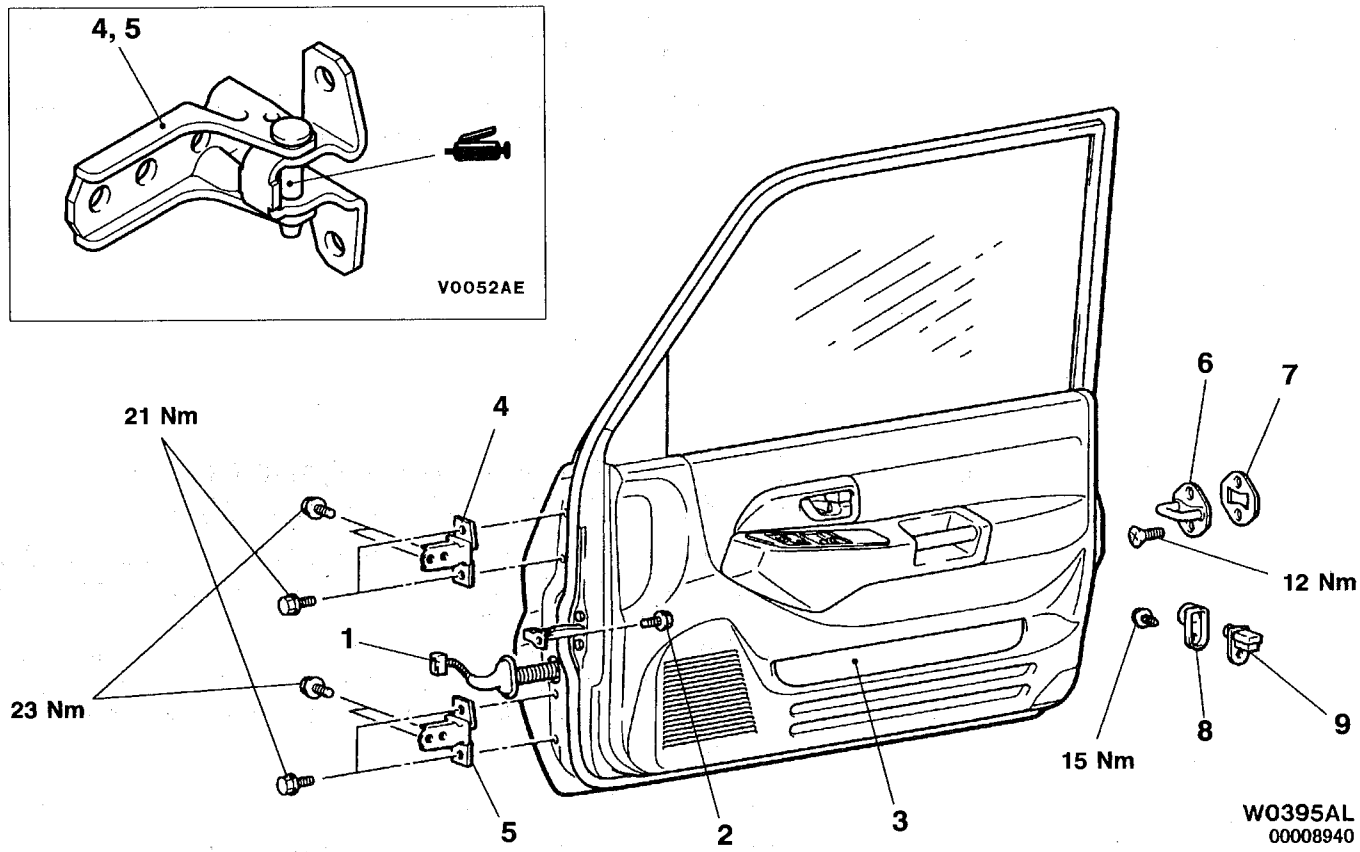

Door assembly removal steps
1. Harness connector
2. Door check connecting bolt
3. Door assembly
4. Door upper hinge
5. Door lower hinge

Striker removal steps
6. Striker
7. Striker shim

Door switch removal steps
8. Door switch cap
9. Door switch

<REAR DOOR>

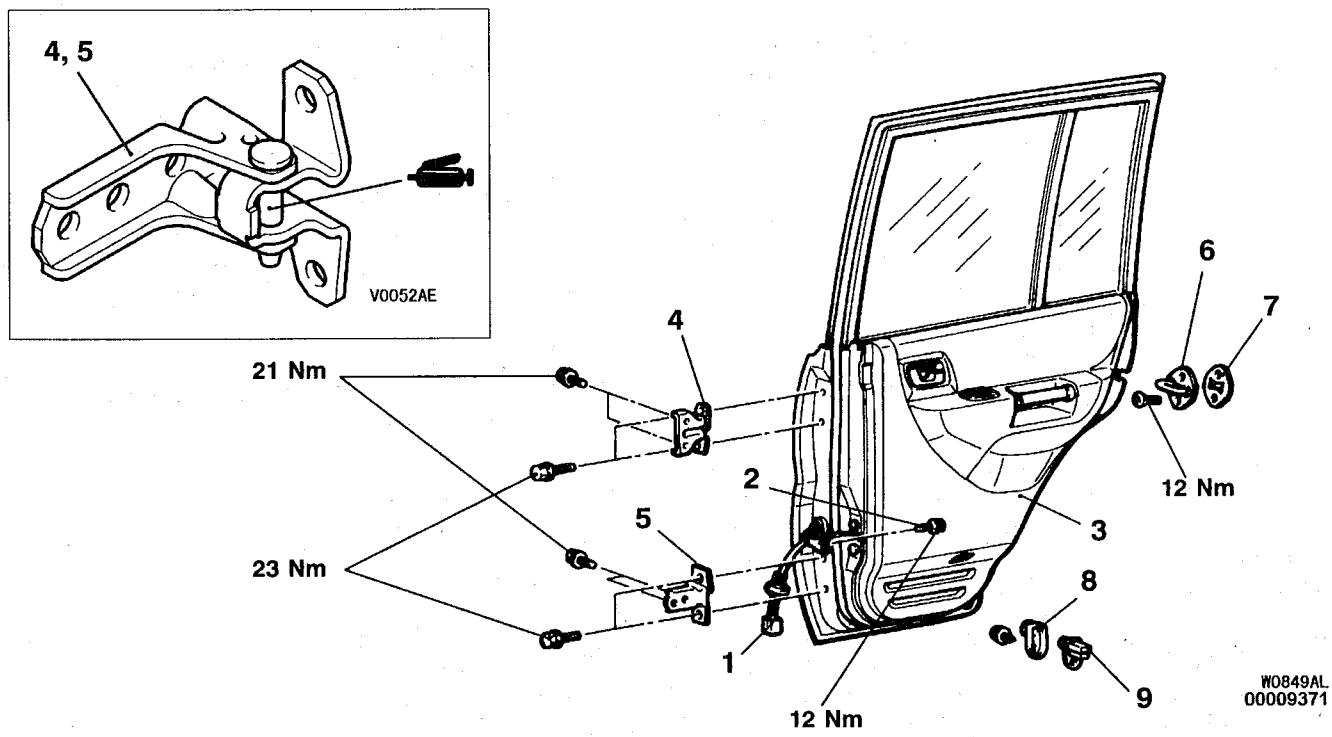

Door assembly removal steps
1. Harness connector
2. Door check connecting bolt
3. Door assembly
4. Door upper hinge
5. Door lower hinge

Striker removal steps
6. Striker
7. Striker shim

Door switch removal steps
8. Door switch cap
9. Door switch

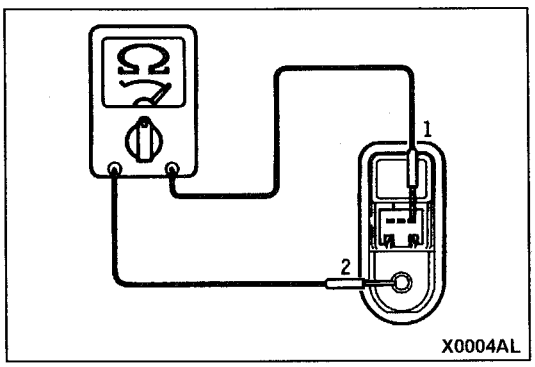

INSPECTION

DOOR SWITCH CONTINUITY CHECK

Switch position	Terminal number	
	1	2 (Earth)
Released (ON)	○	○
Depressed (OFF)		

DOOR TRIM AND WATERPROOF FILM

REMOVAL AND INSTALLATION

<FRONT DOOR>

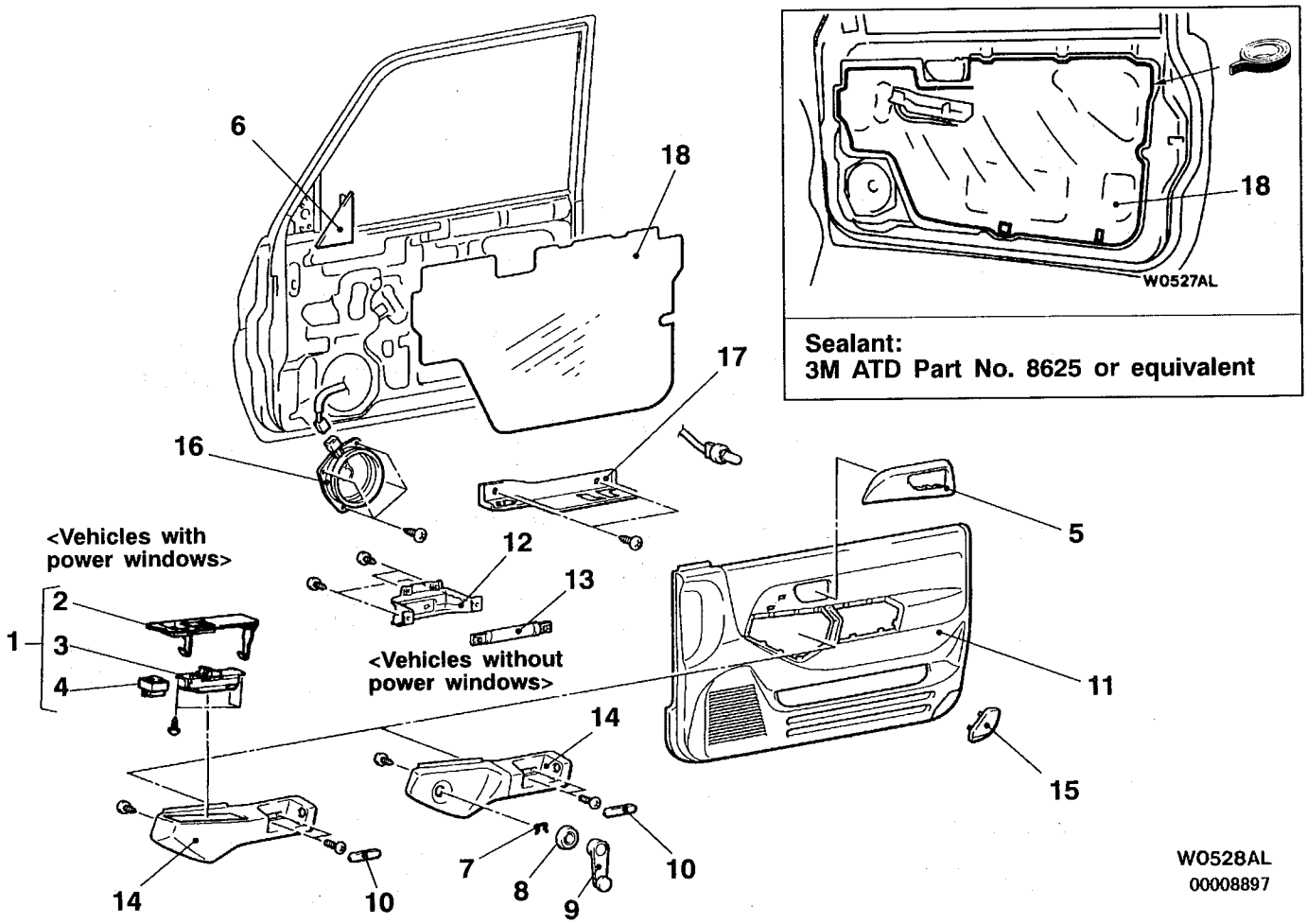

Sealant:
3M ATD Part No. 8625 or equivalent

Removal steps

◀A▶ 1. Power window and remote-controlled mirror switch assembly
2. Power window switch panel assembly
3. Power window switch
4. Remote-controlled mirror switch
◀B▶ 5. Door inside handle cover
6. Delta cover, inner
◀C▶ ▶B◀ 7. Clip
▶B◀ 8. Escutcheon
▶B◀ 9. Regulator handle
10. Cap
11. Door trim
12. Grip bracket
13. Door grip
14. Front arm restraint cover
15. Door lamp lense
16. Speaker
17. Power window switch bracket
▶A◀ 18. Waterproof film

<REAR DOOR>

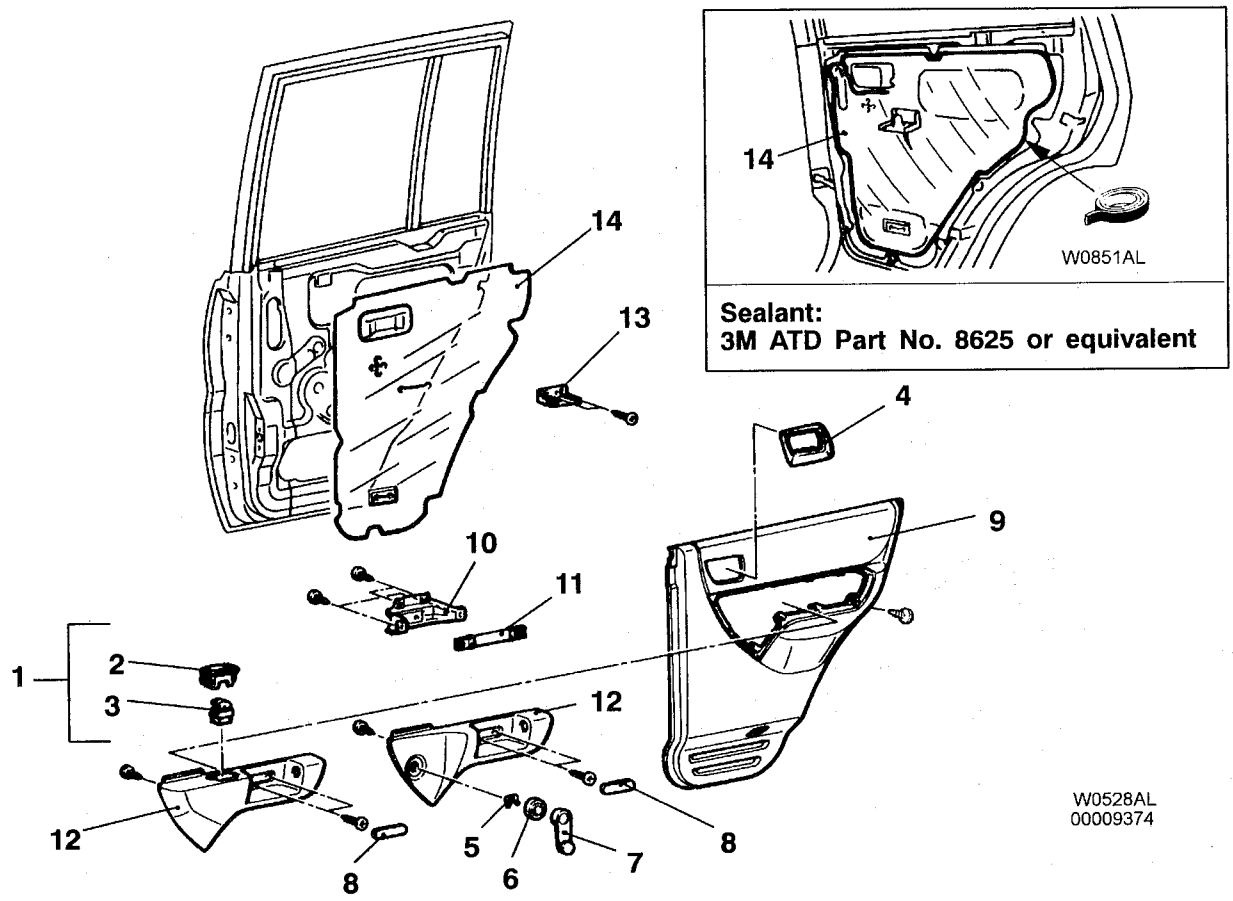

Removal steps

◀A▶ 1. Power window switch panel assembly
2. Power window switch panel
3. Power window switch
◀B▶ 4. Door inside handle cover
▶B◀ 5. Clip
▶B◀ 6. Escutcheon
▶B◀ 7. Regulator handle
8. Cap
9. Door trim
10. Grip bracket
11. Door grip
12. Rear arm restraint cover
13. Power window switch bracket
▶A◀ 14. Waterproof film

CLIP AND CLAW POSITIONS

<FRONT DOOR>

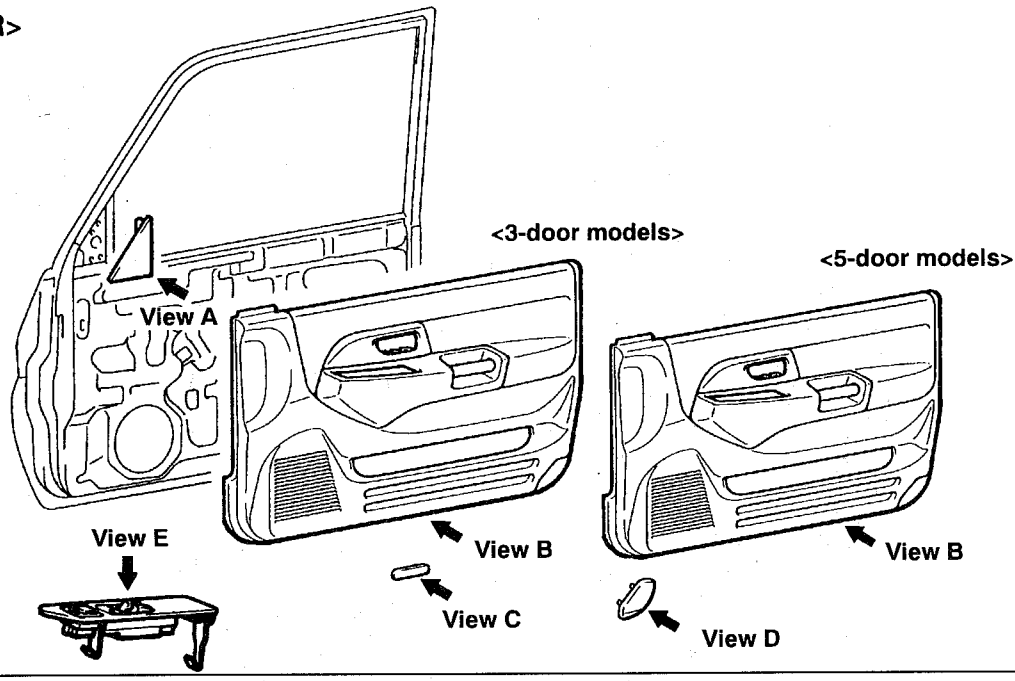

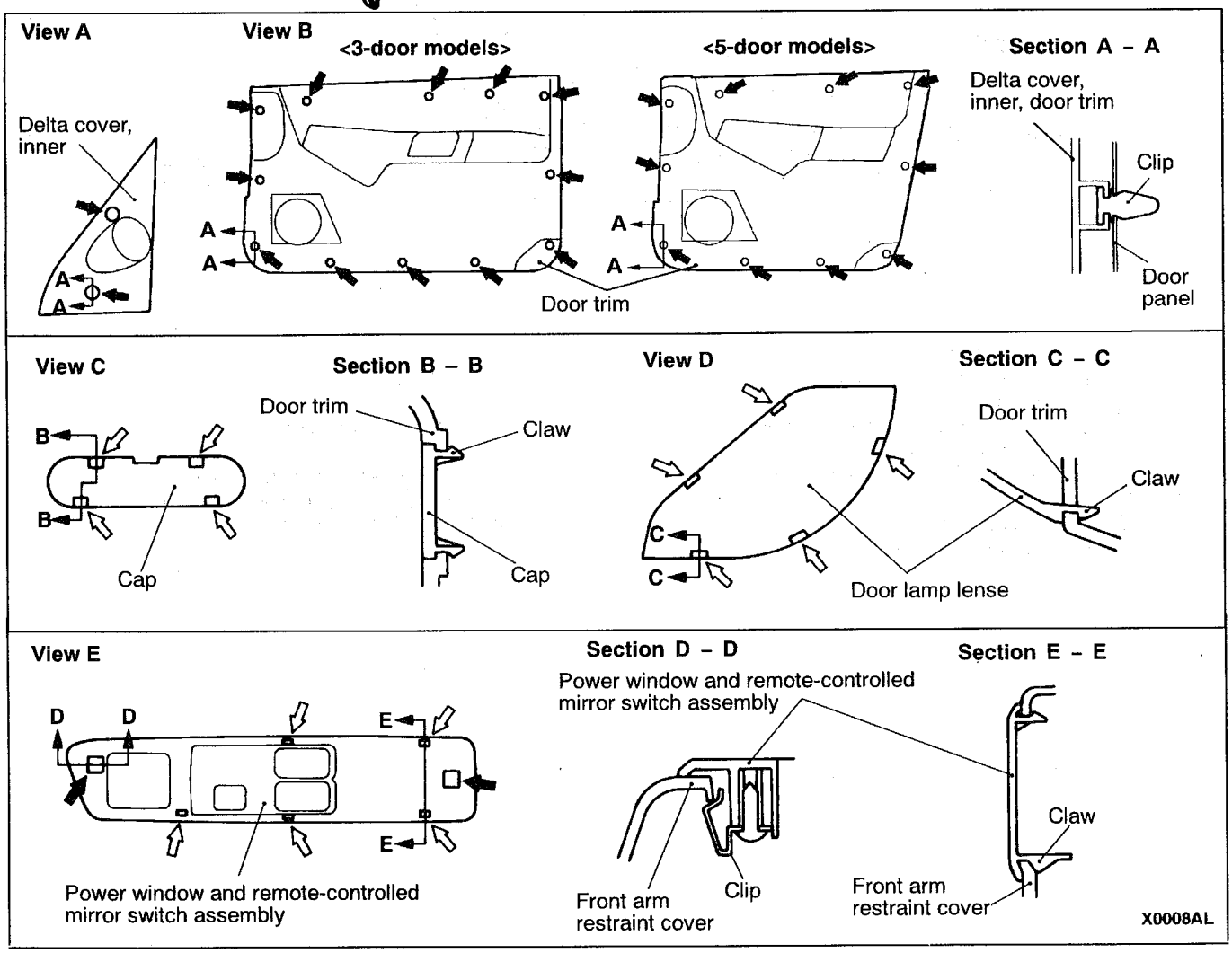

NOTE
⬅ Clips
⇦ Claws

<REAR DOOR>

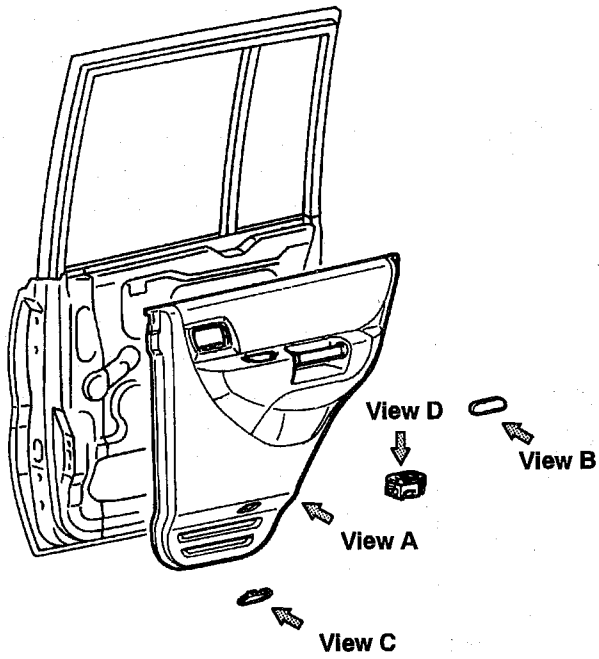

W0856AL

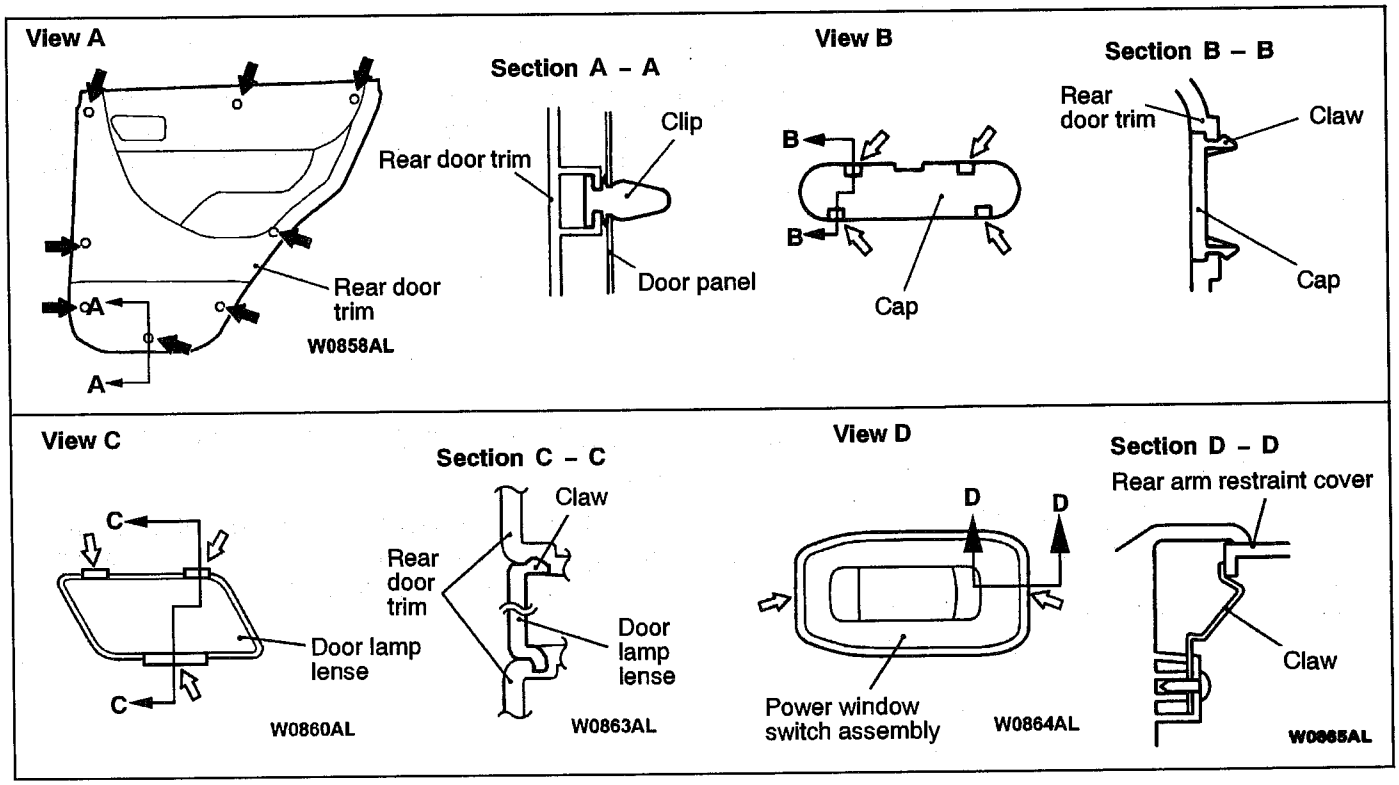

NOTE
◀ Clips
⇦ Claws

X0020AL

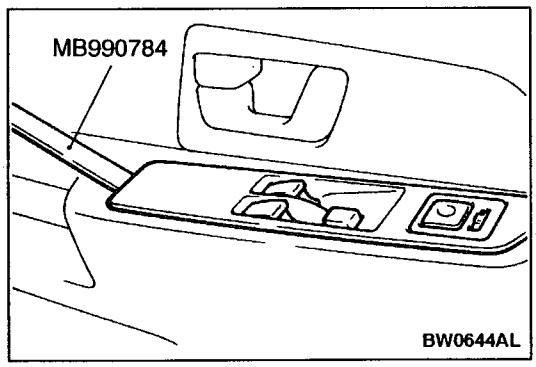

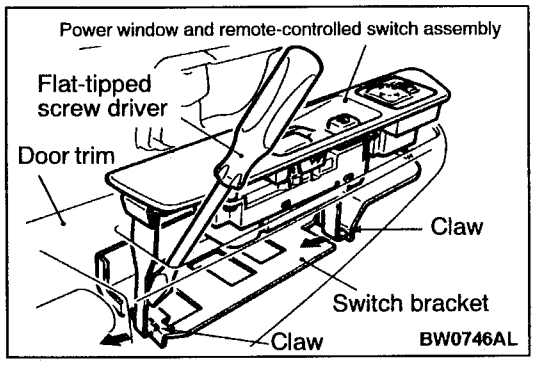

REMOVAL SERVICE POINTS

◀A▶ POWER WINDOW AND REMOTE-CONTROLLED MIRROR SWITCH ASSEMBLY/POWER WINDOW SWITCH PANEL ASSEMBLY REMOVAL

<Front door>

1. Use the special tool to pry out the power window and remote-controlled mirror switch assembly, first at the front and then at the rear. (Refer to P.42-42, CLAW AND CLIP POSITIONS.)

2. Use a flat-tipped screwdriver to disengage the lower claws of the power window and remote-controlled mirror switch assembly as shown in the illustration, and then remove the power window and remote-controlled mirror switch assembly.

<Rear door>

Use the special tool to pry out the rear part of power window switch panel assembly, and then remove the power window switch panel assembly. (Refer to P.42-43, CLAW AND CLIP POSITIONS.)

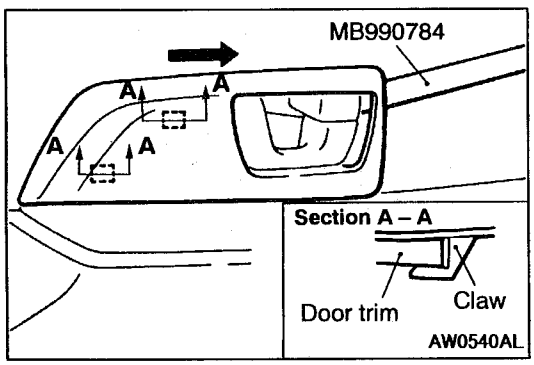

◀B▶ DOOR INSIDE HANDLE COVER REMOVAL

<Front door>

Use the special tool to pry out the rear part of door inside handle cover, and then slide the door inside handle cover in the direction of arrow shown to remove it.

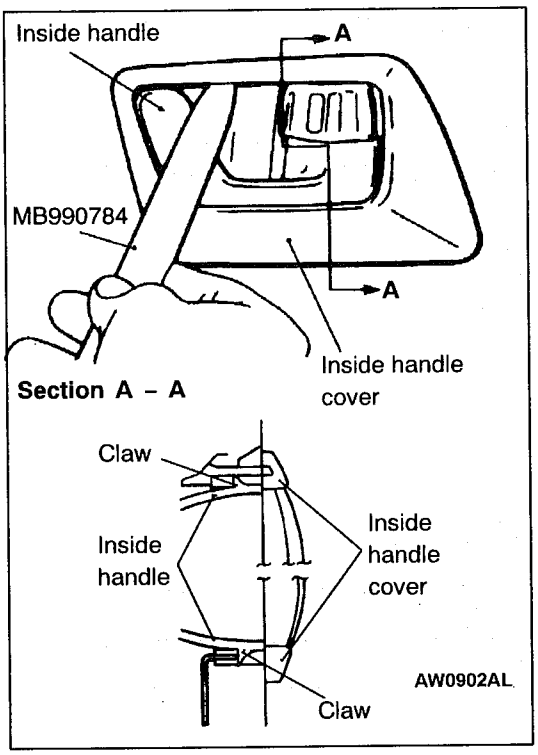

<Rear door>

1. Insert the special tool between the inside handle upper part and the inside handle cover, and then disengage the upper claw of the inside handle.
2. Disengage the lower claw of the inside handle in the same manner as for the upper claw.
3. Remove the door trim.
4. Remove the inside handle cover from the door trim.

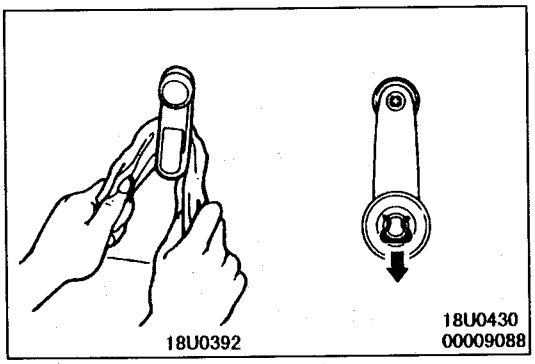

◀C▶ CLIP REMOVAL

Use a cloth to remove the clip as shown in the illustration.

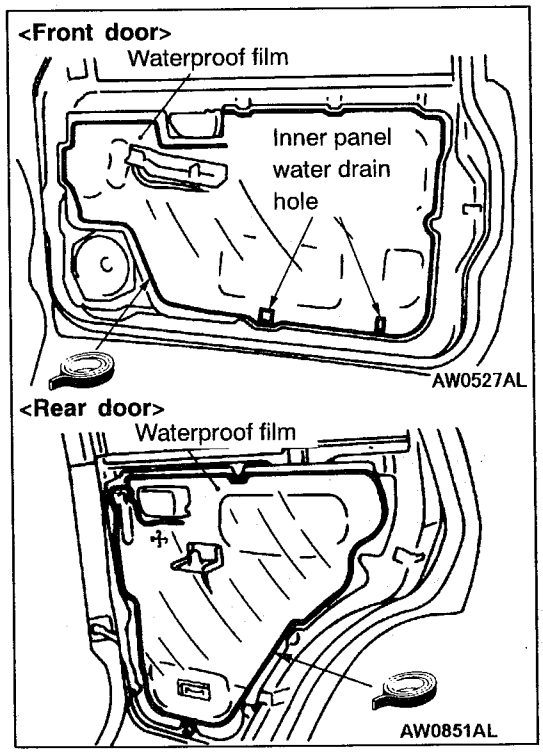

INSTALLATION SERVICE POINTS

▶A◀ WATERPROOF FILM INSTALLATION

Apply the specified sealant to the shown positions of waterproof film, and then attach the waterproof film.

Specified sealant: 3M ATD Part No. 8625 or equivalent

Caution
Be sure to apply the sealant below the inner panel water drain holes so as not to plug them.

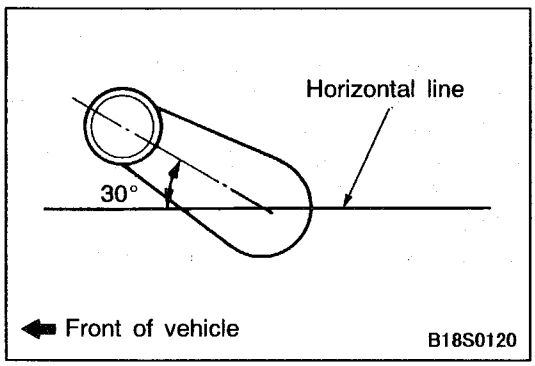

▶B◀ REGULATOR HANDLE/ESCUTCHEON/CLIP INSTALLATION

1. Install the clip and escutcheon to the regulator handle.
2. Close the front door window glass fully, and then install the regulator handle as shown in the illustration.

DOOR GLASS AND REGULATOR

REMOVAL AND INSTALLATION

Pre-removal Operation
- Door Mirror Removal <Front door> (Refer to GROUP 51.)
- Door Tweeter Speaker Removal <Front door> (Refer to GROUP 54.)
- Door Trim and Waterproof Film Removal (Refer to P.42-40.)

Post-installation Operation
- Door Window Glass Adjustment (Refer to P.42-35.)
- Door Trim and Waterproof Film Installation (Refer to P.42-38, 39.)
- Door Tweeter Speaker Installation <Front door> (Refer to GROUP 51.)
- Door Mirror Installation <Front door> (Refer to GROUP 51.)

<FRONT DOOR>

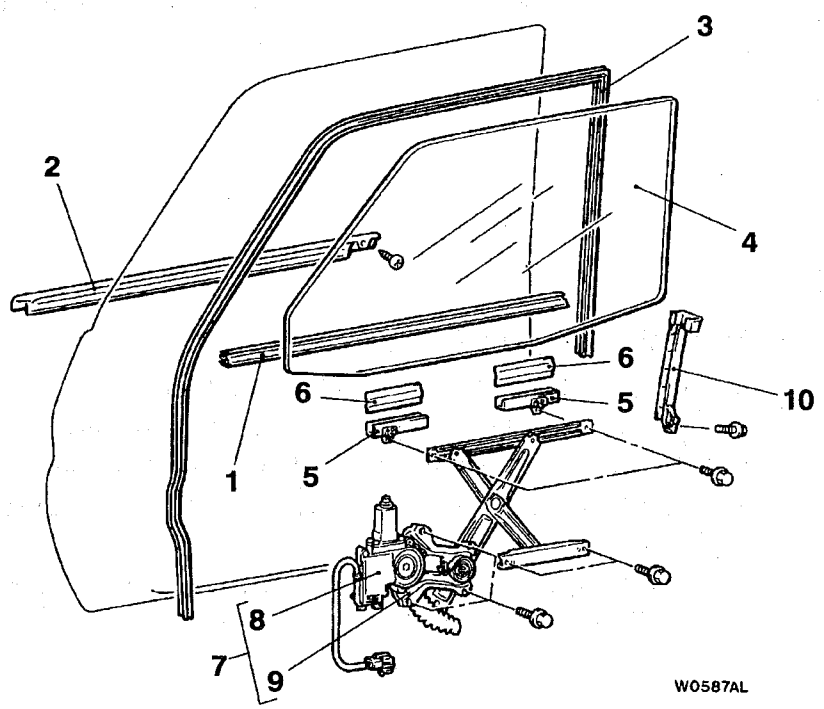

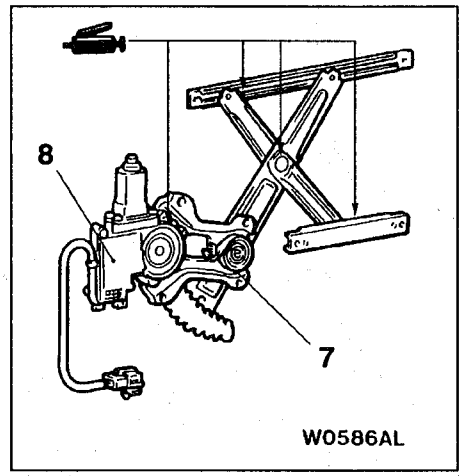

00008947

Door window glass removal steps
1. Door window inner weather strip
2. Door belt line moulding assembly
3. Door window glass runchannel

▶C◀ 4. Door window glass
▶C◀ 5. Glass holder
▶C◀ 6. Door glass pad

◀A▶ **Power window regulator and motor assembly removal steps**

7. Power window regulator and motor assembly
▶B◀ 8. Power window motor assembly
▶B◀ 9. Power window regulator assembly
▶A◀ 10. Rear lower sash

<REAR DOOR>

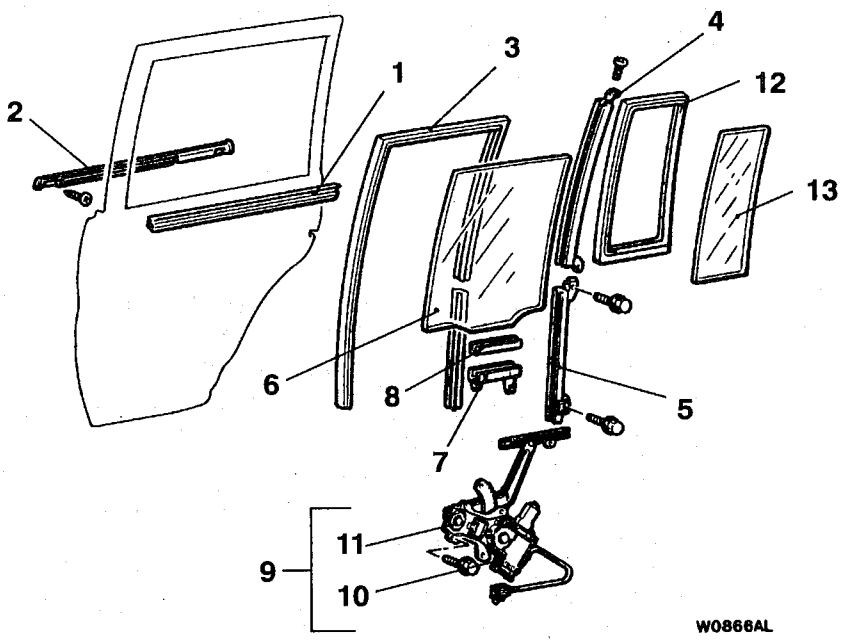

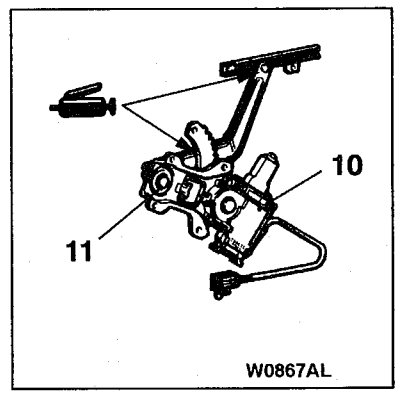

00009377

Door window glass removal steps

1. Door window inner weather strip
2. Door belt line moulding assembly
3. Door window glass runchannel
▶D◀ 4. Rear center sash
▶D◀ 5. Rear lower sash
▶C◀ 6. Rear door window glass
▶C◀ 7. Glass holder
▶C◀ 8. Door glass pad

Power window regulator and motor assembly removal steps

◀A▶ 9. Power window regulator and motor assembly
▶B◀ 10. Power window motor assembly
▶B◀ 11. Power window regulator assembly
12. Stationary window glass
13. Stationary window glass weather strip

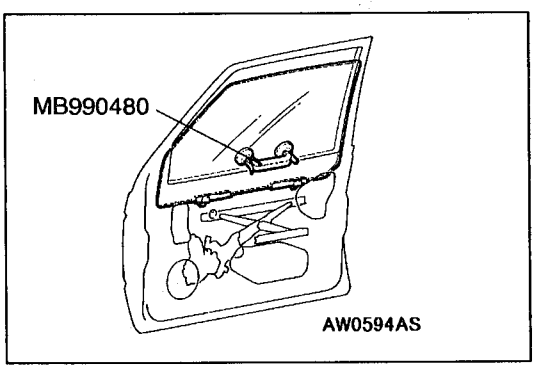

REMOVAL SERVICE POINT

◀A▶ POWER WINDOW REGULATOR AND MOTOR ASSEMBLY REMOVAL

1. Remove the door window glass assembly installation bolts.
2. Lift up the door window glass assembly, and then install the special tool to the window glass as shown in the illustration to prevent the window glass falling.

Caution
If a film, etc. is attached to the door window glass, install the special tool to the outside of window glass in order to prevent the film peeling.

3. Remove the power window regulator and motor assembly.

INSTALLATION SERVICE POINTS

▶A◀ REAR LOWER SASH INSTALLATION

Be sure to insert the rear lower sash to the window rear sash (at door) securely.

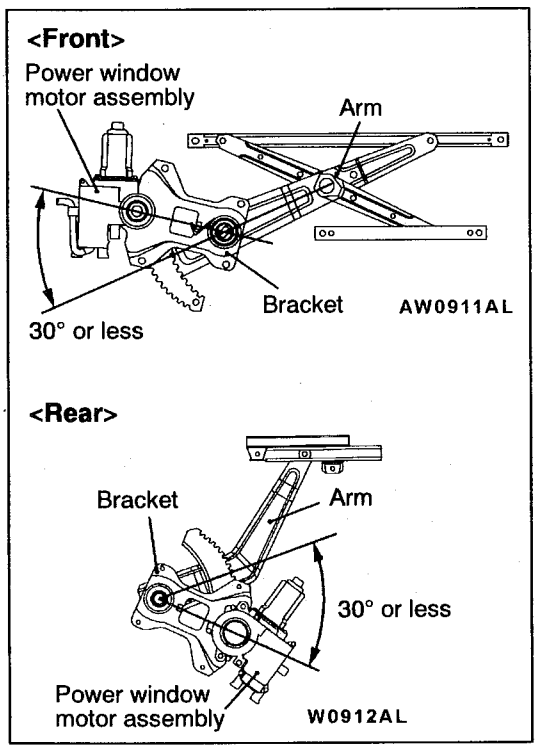

▶B◀ POWER WINDOW MOTOR ASSEMBLY/POWER WINDOW REGULATOR ASSEMBLY INSTALLATION <Vehicles for Hong Kong>

Adjust the power window motor assembly and power window regulator assembly positions as follows:

1. Connect the power window motor assembly connector and the power window switch connector to the wiring harness of body side.
2. Turn on the power window switch to operate the power window motor for 3 seconds in the direction which the window glass closes.
3. Disconnect the power window motor assembly connector and the power window switch connector from the wiring harness of body side.
4. Assemble the power window motor assembly and the power window regulator so that the arm and bracket are positioned as shown in the illustration, and then install the power window motor assembly.

Caution
When installing the power window regulator, do not set it in the window glass fully-closed position. If installing the power window regulator in that condition, the window glass safety mechanism will not functions correctly.

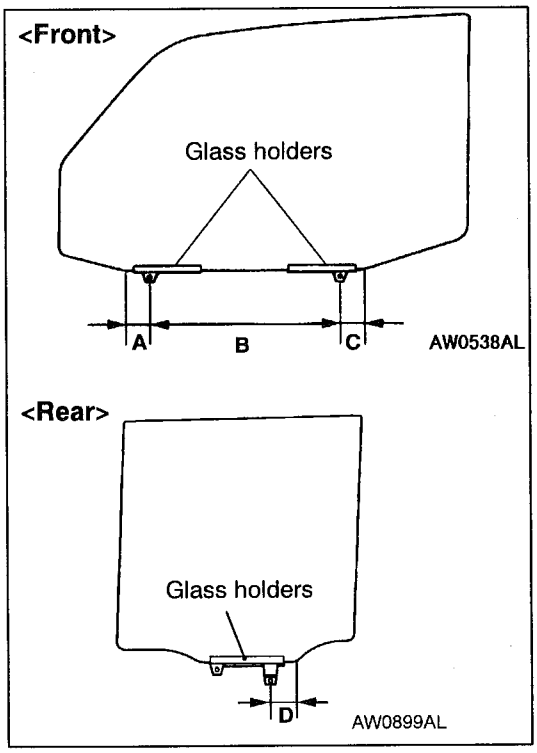

▶C◀ DOOR WINDOW GLASS/GLASS HOLDER/DOOR GLASS PAD INSTALLATION

1. Install the door glass pads and glass holders to the window glass in the positions shown.

   Standard value (A): 55.0 mm

   Standard value (B): 419.0 – 421.0 mm

   Standard value (C): 55.0 mm

   Standard value (D): 32.0 mm

2. Install the glass to the window regulator assembly.

   Caution <Vehicles for Hong Kong>
   Do not activate the window regulator assemble before installing the glass as the resetting in the limit switch is cancelled.

▶D◀ REAR LOWER SASH/REAR CENTER SASH INSTALLATION

Be sure to insert the rear lower sash to the window rear sash (at door) securely.

INSPECTION

POWER WINDOW MAIN SWITCH CONTINUITY CHECK <EXCEPT VEHICLES FOR HONG KONG>

<3-door models>

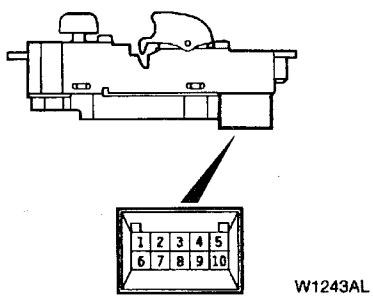

<5-door models>

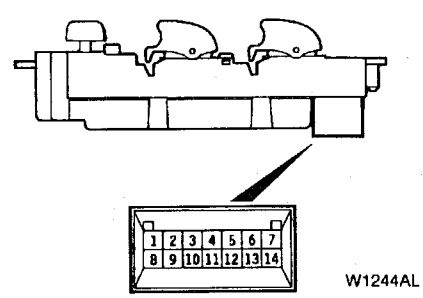

<3-door models>

Switch position		Terminal No.							
		Driver side				Passenger side			
		2	4	5	6	1	2	4	10
Un-lock	UP								
	OFF								
	DOWN								
Lock	UP								
	OFF								
	DOWN								

<5-door models>

Switch position		Terminal No.															
		Front door								Rear door							
		Driver side				Passenger side				Driver side				Passenger side			
		3	5	7	8	1	3	5	14	3	5	6	13	2	3	5	9
Un-lock	UP																
	OFF																
	DOWN																
Lock	UP																
	OFF																
	DOWN																

NOTE <Vehicles for Hong Kong>
Power window main switch uses SWS system, for the power window main switch check, refer to GROUP 54 – SWS.

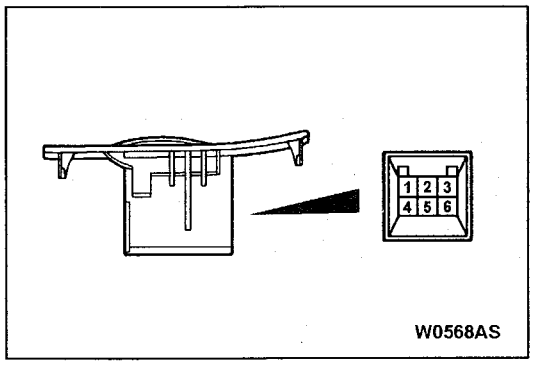

POWER WINDOW SUB SWITCH CONTINUITY CHECK

<Except vehicles for Hong Kong>

Switch position	Terminal No.				
	1	2	4	5	6
UP	○	○	○		○
OFF	○		○	○	○
DOWN	○	○		○	○

<Vehicles for Hong Kong>

Switch position	Terminal No.		
	1	4	6
UP		○	○
DOWN	○	○	

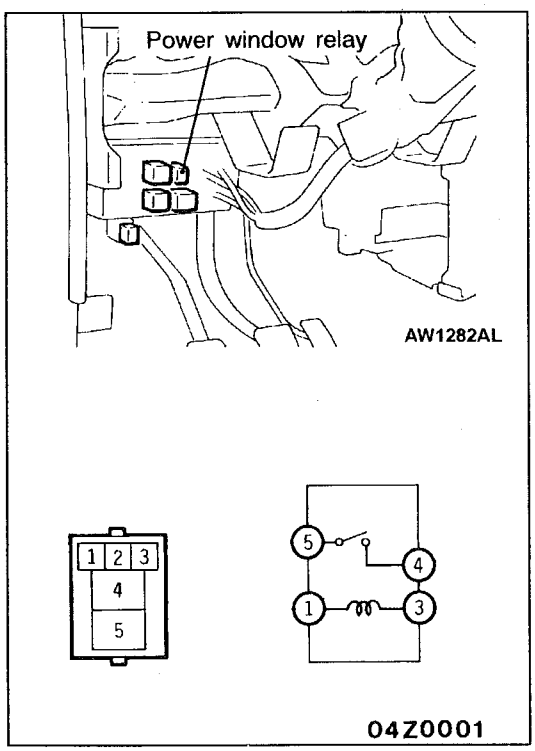

POWER WINDOW RELAY CONTINUITY CHECK

Battery voltage	Terminal No.			
	1	3	4	5
Not applied	○	○		
Applied	⊕	⊖	○	○

POWER WINDOW MOTOR CHECK <EXCEPT VEHICLES FOR HONG KONG>

1. Connect the battery directly to the motor terminals. Check that the motor rotates smoothly.
2. Reconnect the battery to the motor terminals vice versa. Check that the motor rotates in the reverse direction.
3. If malfunction is present, replace the window regulator assembly.

DOOR HANDLE AND LATCH

REMOVAL AND INSTALLATION

Pre-removal Operation
Door Trim Removal (Refer to P.42-40.)

Post-installation Operation
- Door Inside Handle Play Check (Refer to P.42-37.)
- Door Outside Handle Play Check (Refer to P.42-36.)
- Door Trim Installation (Refer to P.42-40.)

<FRONT DOOR>

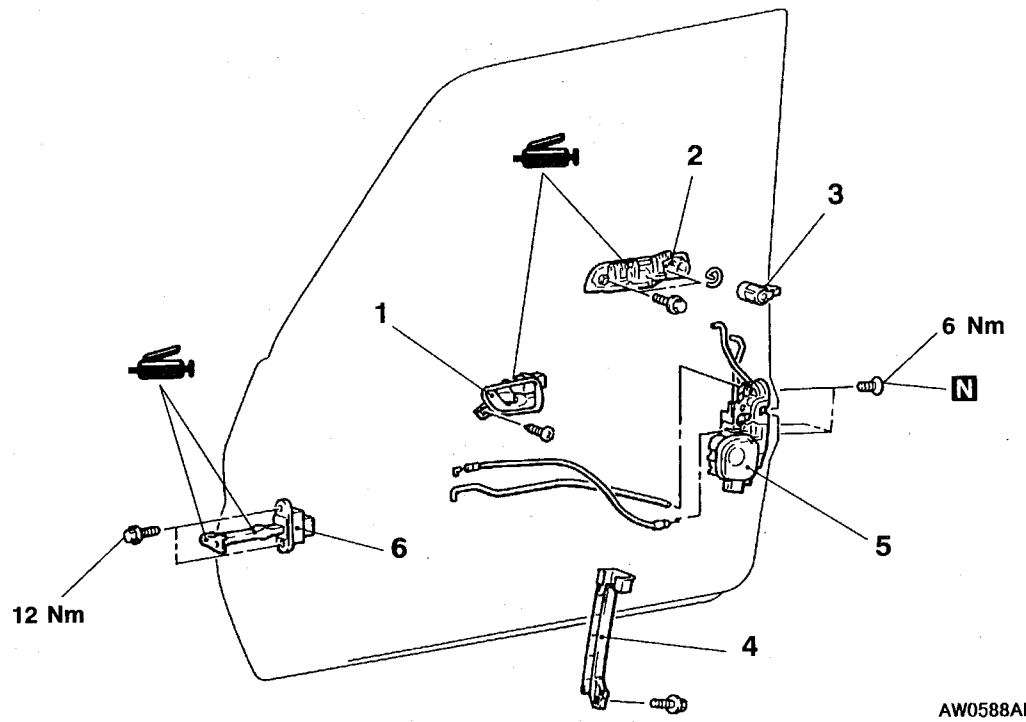

Door handle and door latch assembly removal steps

▶C◀ 1. Door inside handle
- Waterproof film (Refer to P.42-40.)

2. Door outside handle
3. Door lock key cylinder
▶B◀ 4. Rear lower sash
5. Door latch assembly

Door check removal steps
- Waterproof film (Refer to P.42-40.)

▶A◀ 6. Door check

<REAR DOOR>

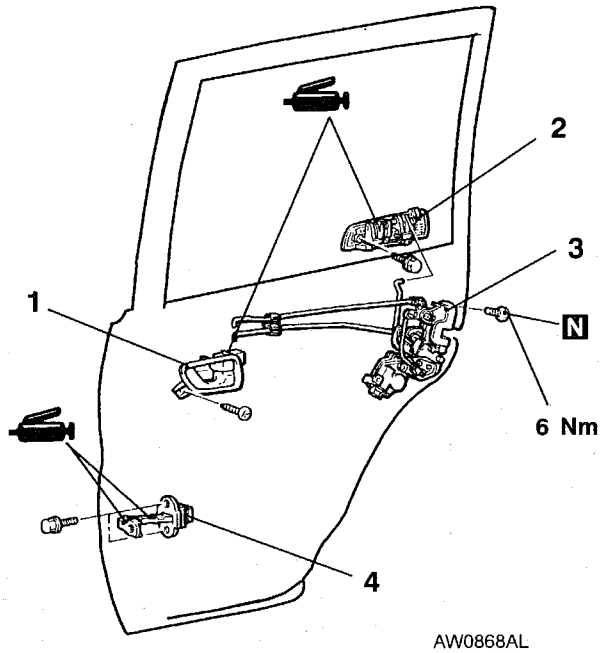

Door handle and door latch assembly removal steps

▶C◀ 1. Door inside handle
- Waterproof film (Refer to P.42-40.)

2. Door outside handle
3. Door latch assembly

Door check removal steps

- Waterproof film (Refer to P.42-40.)

▶A◀ 4. Door check

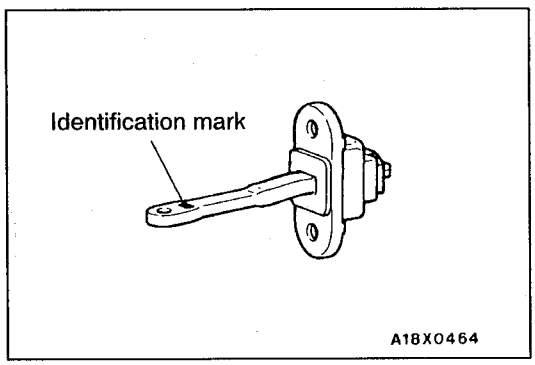

INSTALLATION SERVICE POINTS

▶A◀ DOOR CHECK INSTALLATION

Install with the following identification marks upward.

<Front door>

Items	Identification mark
Left door	21L
Right door	21R

<Rear door>

Items	Identification mark
Left door	26L
Right door	26R

▶B◀ REAR LOWER SASH INSTALLATION

Be sure to install the rear lower sash to the window rear sash (at door) securely.

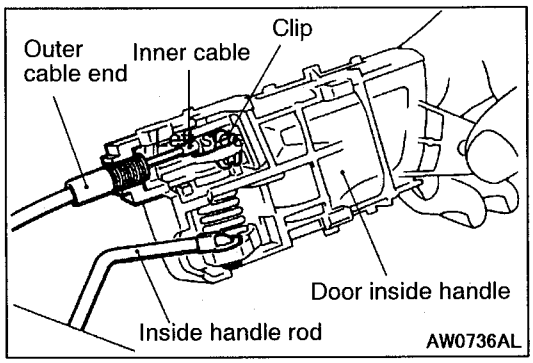

▶C◀ DOOR INSIDE HANDLE INSTALLATION

1. Install the inside lock cable to the door inside handle as follows:
   (1) Install the inner cable end in the inside lock cable to the clip in the door inside handle.
   (2) Turn the inside lock knob to the door lock position.
   (3) Install the outer cable end to the door inside handle securely.
   (4) Install the clip to the inner cable.
2. Install the inside handle rod to the door inside handle.
3. Install the door inside handle to the door.

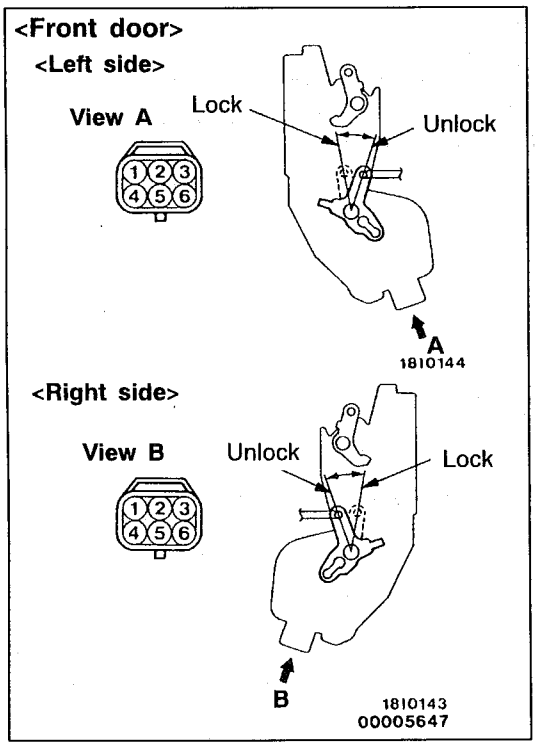

INSPECTION

DOOR LOCK ACTUATOR CHECK

Front door

<Left side>

Rod position	Terminal No.		Rod operation
	4	6	
LOCK	⊖	⊕	LOCK to UNLOCK
UNLOCK	⊕	⊖	UNLOCK to LOCK

<Right side>

Rod position	Terminal No.					Rod operation
	1	2	3	4	6	
LOCK				⊖	⊕	LOCK to UNLOCK
UNLOCK				⊕	⊖	UNLOCK to LOCK
LOCK	○		○			
UNLOCK		○	○			

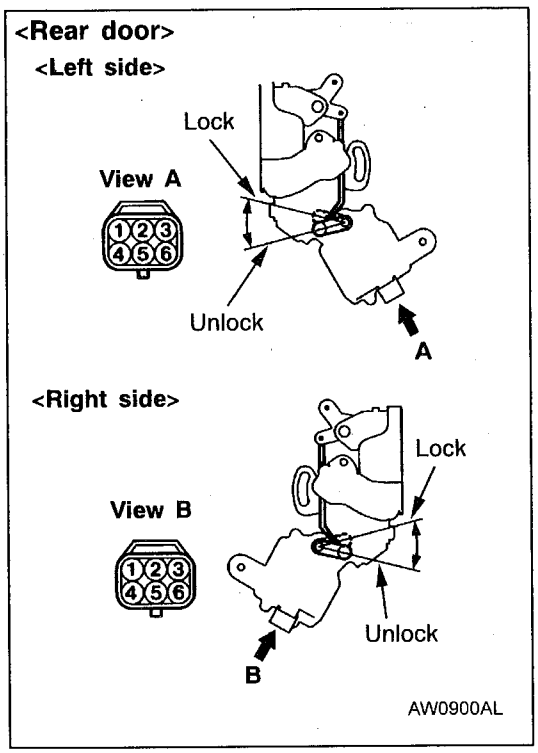

Rear door

Rod position	Terminal No.		Rod operation
	2	3	
LOCK	⊖	⊕	LOCK to UNLOCK
UNLOCK	⊕	⊖	UNLOCK to LOCK

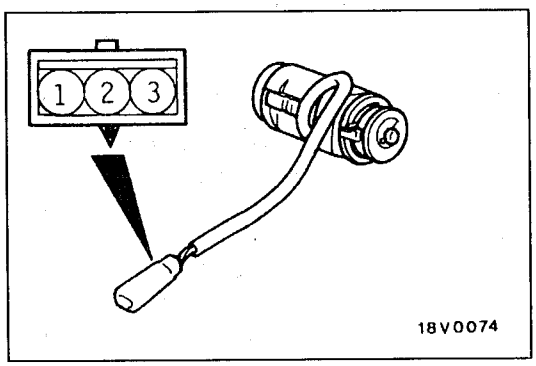

DOOR LOCK KEY CYLINDER SWITCH CONTINUITY CHECK <Vehicles with central door locking system>

Passenger's side only

Switch position	Terminal No.		
	1	2	3
LOCK		○	○
Neutral (OFF)			
UNLOCK	○	○	

WINDOW GLASS RUNCHANNEL AND DOOR OPENING WHETHERSTRIP

REMOVAL AND INSTALLATION

<FRONT DOOR>

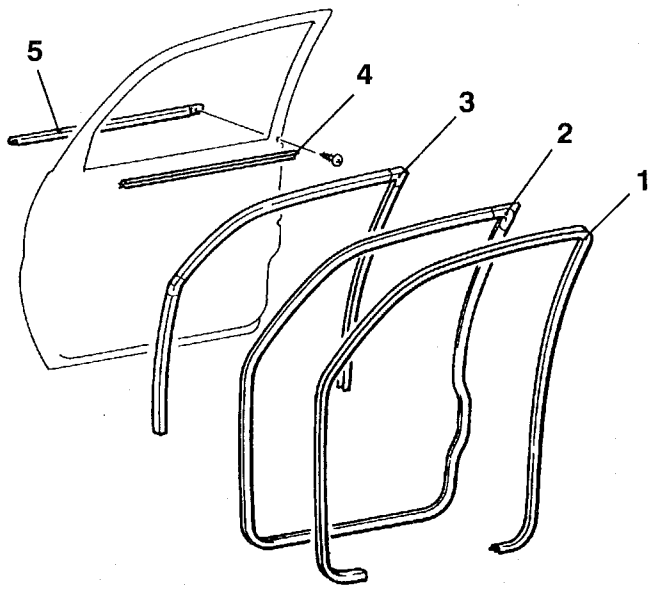

BW0594AL

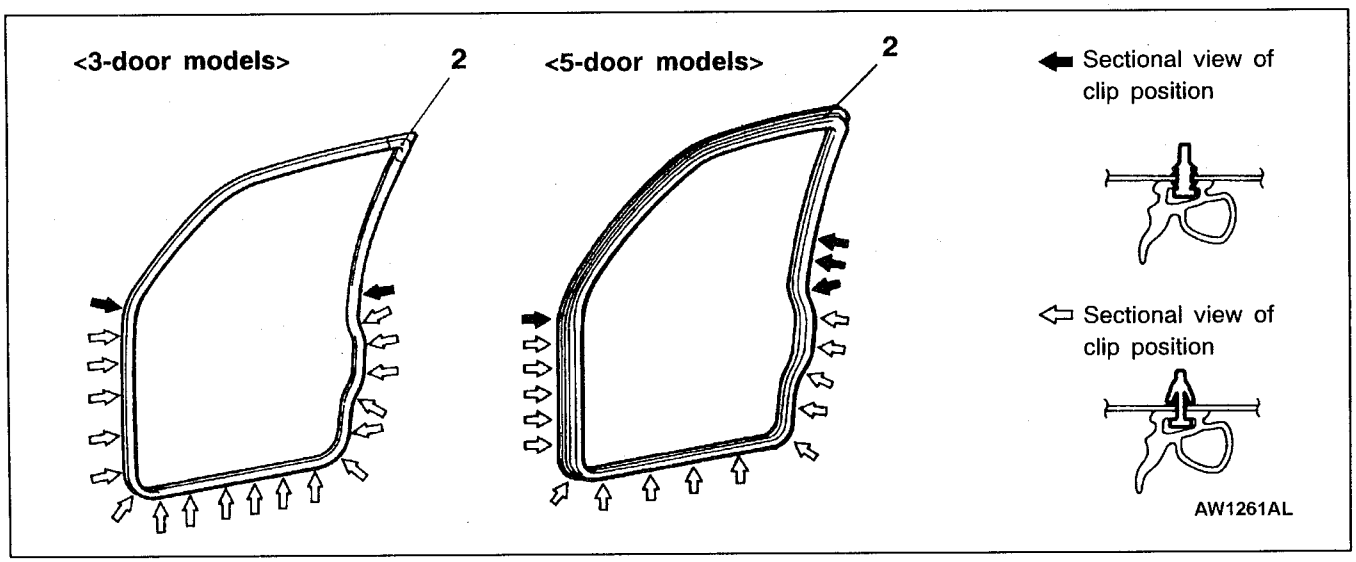

Door inner opening weatherstrip removal steps

- Scuff plate (Refer to GROUP 52A.)
- Cowl side trim (Refer to GROUP 52A.)
- Center pillar lower trim (Refer to GROUP 52A.)

1. Door inner opening weatherstrip

Door outer opening weatherstrip removal

◀A▶ 2. Door outer opening weatherstrip

Door window glass runchannel removal steps

3. Door window glass runchannel
4. Door window glass lower runchannel

Door beltline moulding removal steps

- Outside rear view mirror (Refer to GROUP 51.)

5. Door beltline moulding

<REAR DOOR>

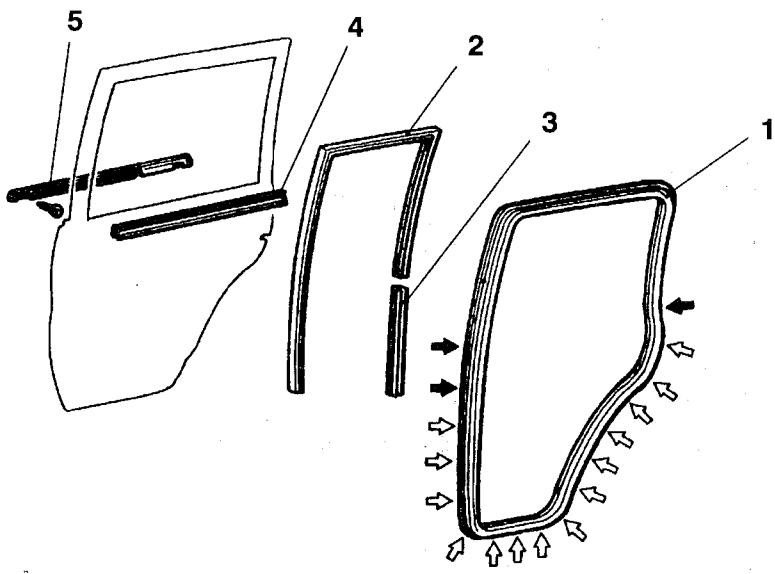

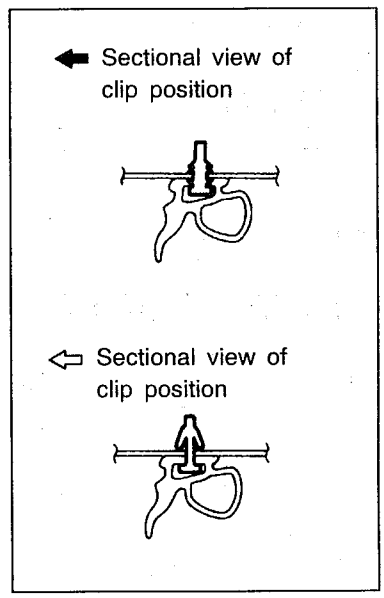

◀A▶ 1. Door outer opening weatherstrip

Door window glass runchannel removal steps

2. Door window glass runchannel
- Door lower sash (Refer to P.42-47.)

3. Door window glass lower runchannel

Door beltline inner weatherstrip removal steps

- Door trim (Refer to P.42-40.)

4. Door beltline inner weatherstrip

Door beltline moulding removal

5. Door beltline moulding

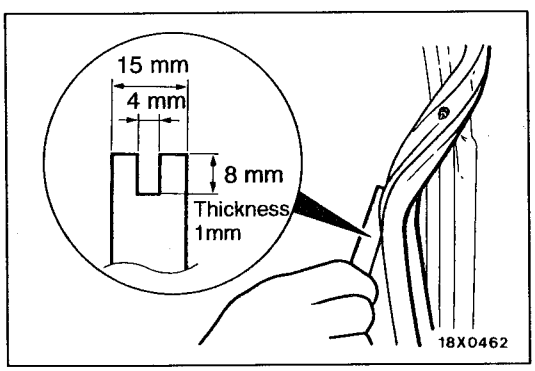

REMOVAL SERVICE POINT

◀A▶ DOOR OUTER OPENING WEATHERSTRIP REMOVAL

Make a tool as shown and remove the door opening weatherstrip.

BACK DOOR

SERVICE SPECIFICATION

Item	Standard value
Back door handle play mm	2.0 – 8.0

SEALANT

Item	Specified sealant	Remark
Waterproof film	3M ATD Part No. 8625 or equivalent	Ribbon sealer

SPECIAL TOOLS

Tool	Number	Name	Use
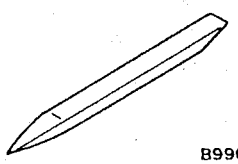 B990784	MB990784	Ornament remover	Back door trim removal
A 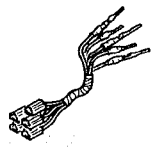 B 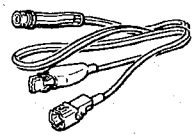 C 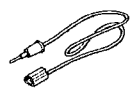 D  C991223	MB991223 A: MB991219 B: MB991220 C: MB991221 D: MB991222	Harness set A: Test harness B: LED harness C: LED harness adapter D: probe	Terminal voltage measurement A: Connector pin contact pressure inspection B: Power circuit inspection C: Power circuit inspection D: Commercial tester connection

TROUBLESHOOTING

INSPECTION CHART FOR TROUBLE SYMPTOMS

Trouble	Reference page
Door lock mechanism does not operate	42-21

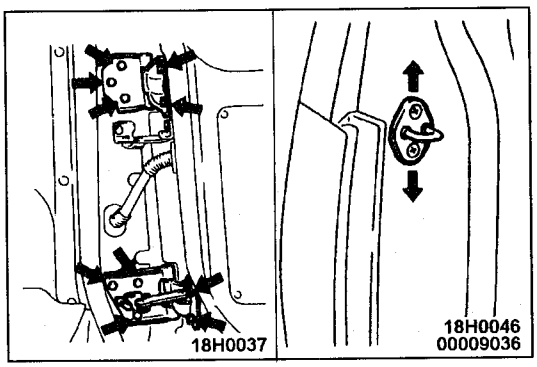

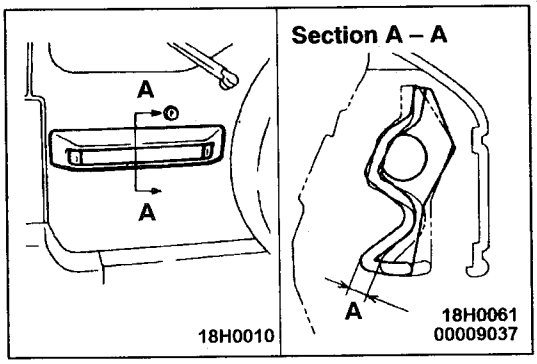

ON-VEHICLE SERVICE

BACK DOOR FIT ADJUSTMENT

1. If the striker and latch mesh badly, move the striker forward and backward or right and left to adjust.
2. If uneven clearance is present between back door and body, reposition the hinge and striker and/or change the thickness of shim (change the number of shim) to adjust the clearance.

BACK DOOR HANDLE PLAY CHECK

1. Measure the back door handle play.

   Standard value (A): 2.0 – 8.0 mm
2. If the back door handle play is not within the standard value, check the back door handle and door latch assembly. Replace if necessary.

BACK DOOR ASSEMBLY

REMOVAL AND INSTALLATION

Pre-removal Operation
- High-mounted Stop Lamp Removal (Refer to GROUP 54.)
- Spare Tyre Removal

Post-installation Operation
- High-mounted Stop Lamp Installation (Refer to GROUP 54.)
- Spare Tyre Installation
- Back Door Fit Adjustment (Refer to P.42-59)

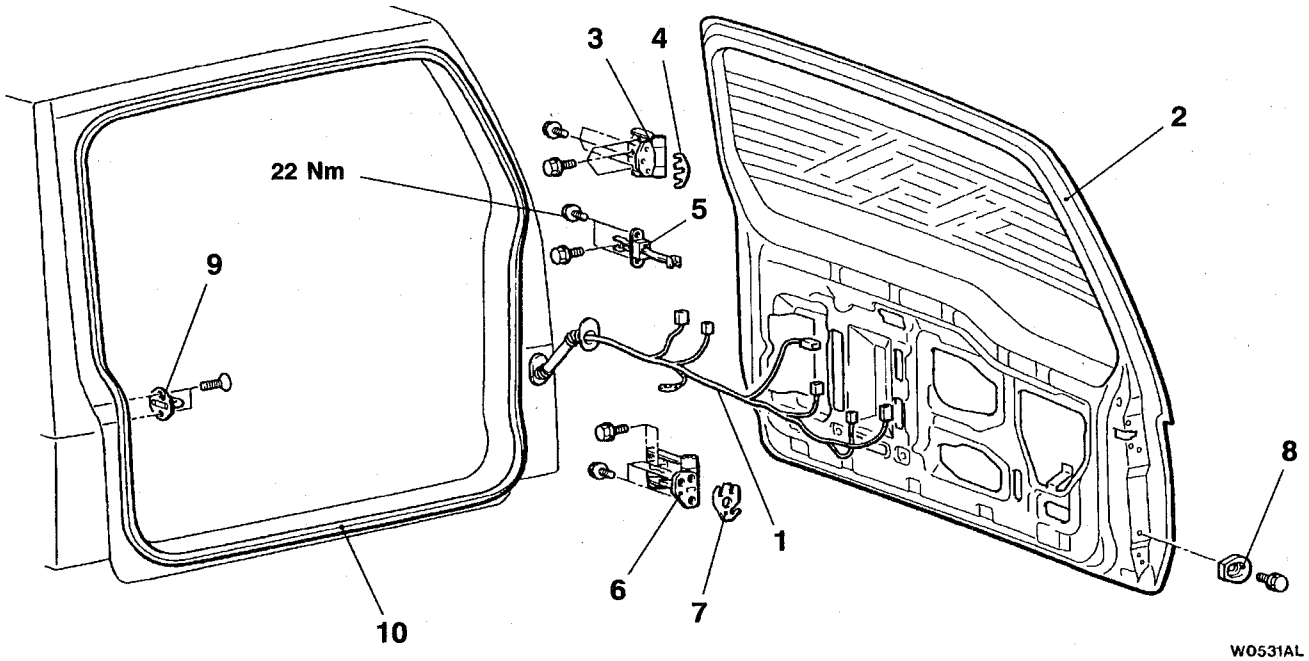

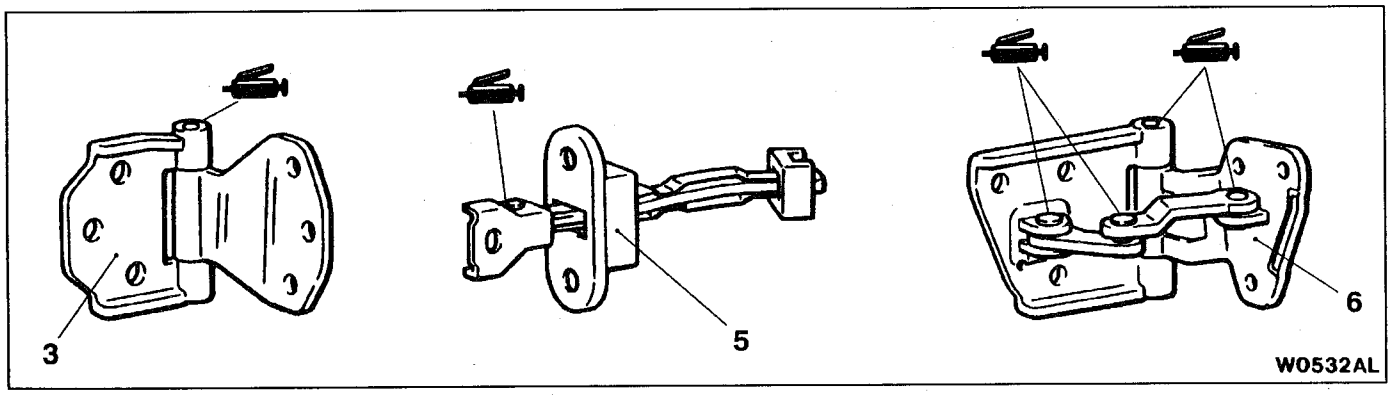

Removal steps
- Back door trim and waterproof film (Refer to P.42-62.)

1. Harness connector
2. Back door assembly
3. Back door upper hinge
4. Shim
5. Door check
6. Back door lower hinge
7. Shim
8. Damper mail
▶B◀ 9. Striker
▶A◀ 10. Back door opening weatherstrip

INSTALLATION SERVICE POINT

▶A◀ BACK DOOR OPENING WEATHERSTRIP INSTALLATION

Align the marking section on the back door opening weatherstrip with the centre of the body.

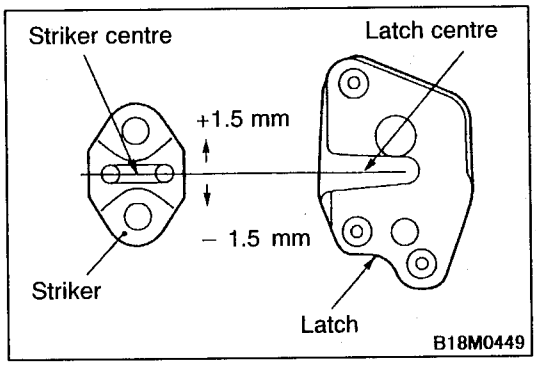

▶B◀ STRIKER INSTALLATION

Install the striker so that the striker centre does not deviate more than ± 1.5 mm from the latch centre.

BACK DOOR TRIM AND WATERPROOF FILM

REMOVAL AND INSTALLATION

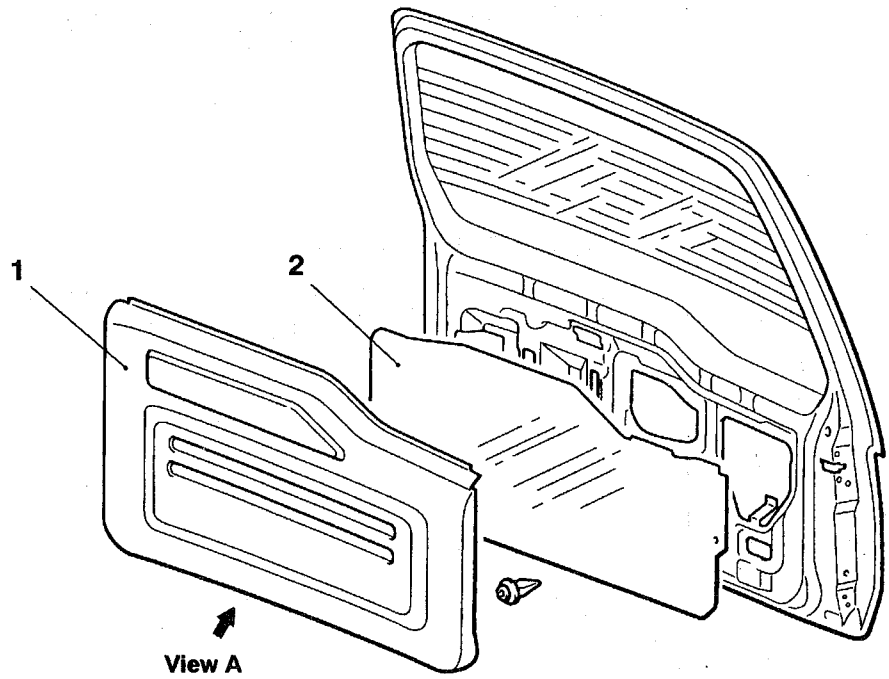

W0533AL
00008942

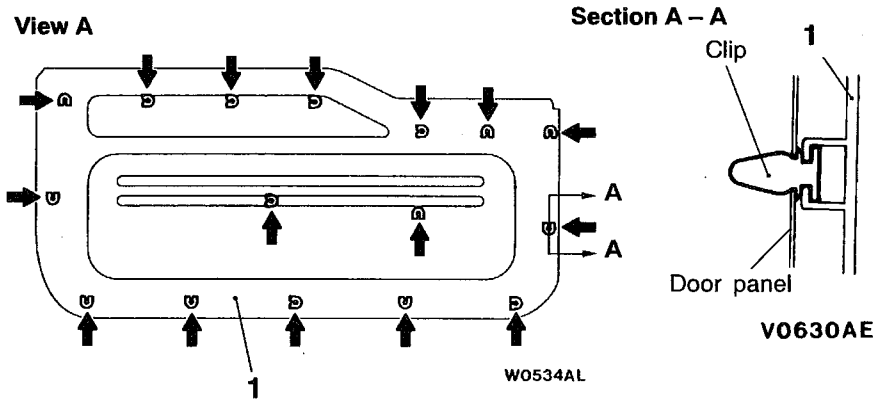

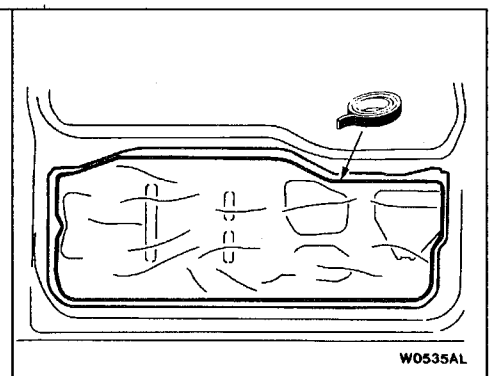

Sealant:
3M ATD Part No. 8625 or equivalent

Removal steps

1. Back door trim
2. Waterproof film

BACK DOOR HANDLE AND LATCH

REMOVAL AND INSTALLATION

Post-installation Operation
Back Door Handle Play Check (Refer to P.42-59.)

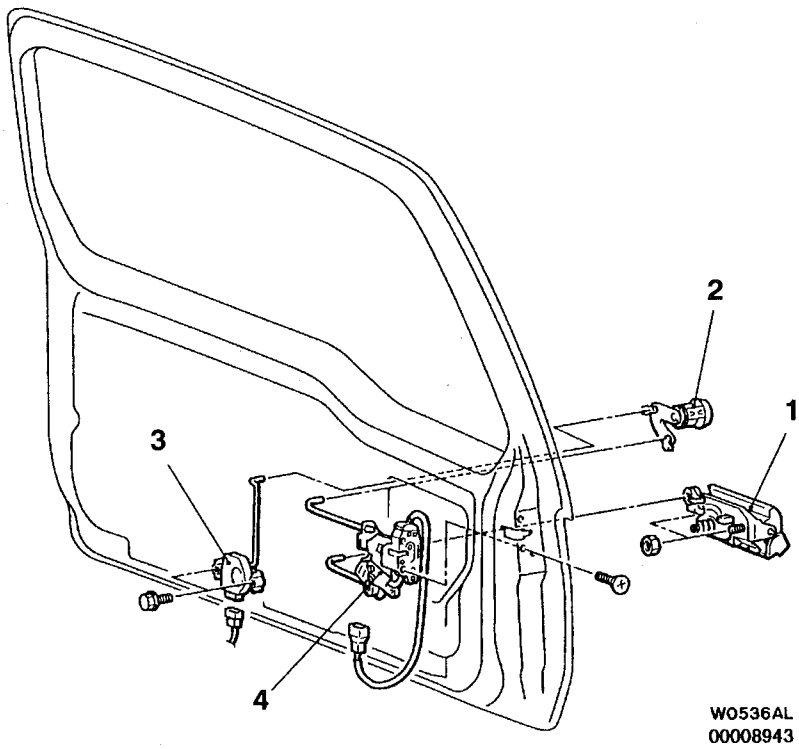

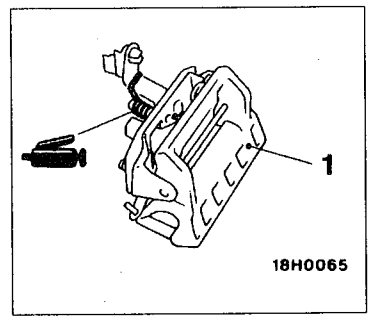

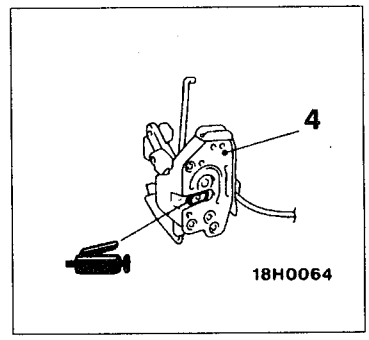

Back door handle and lock key cylinder removal steps
- Back door trim and waterproof film (Refer to P.42-62.)

1. Back door handle
2. Back door lock key cylinder

Back door latch removal steps
- Back door trim and waterproof film (Refer to P.42-62.)

3. Back door lock actuator
4. Back door latch assembly

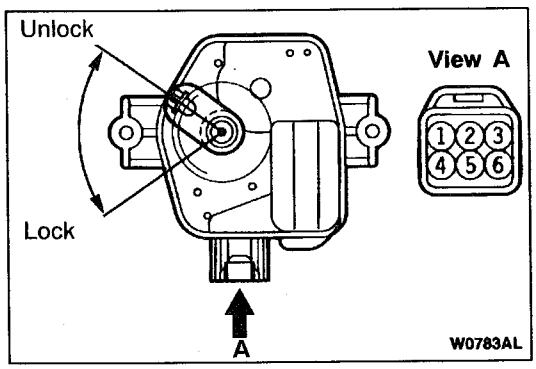

INSPECTION

BACK DOOR LOCK ACTUATOR CHECK

Rod position	Terminal No.		Rod operation
	4	6	
LOCK	⊕	⊖	LOCK to UNLOCK
UNLOCK	⊖	⊕	UNLOCK to LOCK

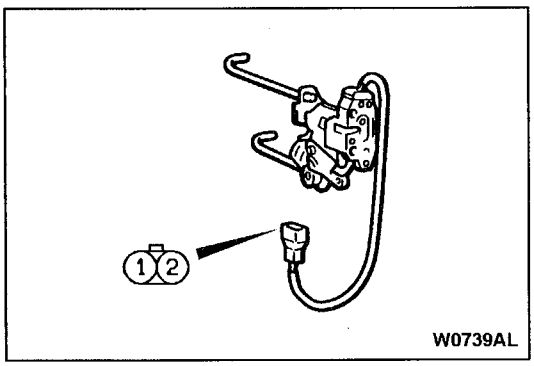

BACK DOOR LATCH CONTINUITY CHECK

Switch position	Terminal No.	
	4	6
Back door opend		
Back door closed	○	○

KEYLESS ENTRY SYSTEM

SPECIAL TOOL

Tool	Number	Name	Use
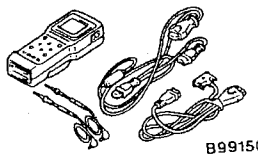 B991502	MB991502	MUT-II sub assembly	Encrypted codes recording

TROUBLESHOOTING

DIAGNOSIS FUNCTION

INPUT SIGNAL INSPECTION PROCEDURE

1. Connect the MUT-II or a voltmeter to the diagnosis connector to check input signal. (Refer to GROUP 00 – How to Use Troubleshooting/Inspection Service Points.)
2. The following input signals can be checked:
   - Ignition switch (IG1, ACC)
   - Driver's door switch
   - Every door switch
   - Key reminder switch
   - Driver's door lock actuator
   - Keyless entry transmitter (LOCK, UNLOCK)

   NOTE
   If the MUT-II cannot check all the input signals, the diagnosis circuit may be defective.

ETACS FUNCTION ADJUSTMENT PROCEDURE

The following functions can be adjusted by operating input switches. The adjustments will be stored in the ECU memory even after a battery cable is disconnected:

- Switching of keyless entry answerback function (From activation to desactivation, or viceversa)
- Initialization of all the ETACS functions (From desactivation to activation)

1. Entry conditions to the adjustment mode
   The ETACS-ECU sounds a buzzer once when all of the following conditions are satisfied, and then enters the adjustment mode:
   - Hazard warning lamp switch: OFF
   - Diagnosis control: ON (Connect the MUT-II or earth the diagnosis connector No.1 terminal.)
   - Key reminder switch: OFF
   - Ignition switch: LOCK (OFF)
   - Driver's door switch: OFF (Close the driver's door.)
   - If all of the conditions above are satisfied, the windshield washer switch will be turned on for more than 10 seconds.
2. Exit conditions from the adjustment mode
   The ETACS-ECU cancels the adjustment mode when any of the following conditions is satisfied:
   - Diagnosis control: ON (Disconnect the MUT-II or disconnect the diagnosis connector No.1 terminal from the earth.)
   - Key reminder switch: ON (Pull out the ignition key.)
   - Ignition switch: Other than LOCK (OFF)
   - Driver's door switch: ON (Open the driver's door.)
   - After the ETACS-ECU has entered the adjustment mode, no adjustment is made within 3 minutes (If any adjustment is made within 3 minutes, the ETACS-ECU monitors a adjustment operation for other 3 minutes.)
   - Other warning buzzer(s) sounds

3. Adjustment of functions

Function	Adjustment procedure
Keyless entry answerback function	When the transmitter lock switch is turned on twice continuously within 2 seconds, the lock answerback function toggles on and off. • If the function toggles on, the buzzer sounds once (default condition). • If the function toggles off, the buzzer sounds twice, When the transmitter unlock switch is turned on twice continuously within 2 seconds, the unlock answerback function toggles on and off. • If the function toggles on, the buzzer sounds once (default condition). • If the function toggles off, the buzzer sounds twice,
Initialization of all the ETACS functions (From desactivation to activation)	When the windshield washer switch remains on for more than 20 seconds, the buzzer sounds twice and then all of the following functions will be initialized. • Automatic lighting sensor sensitivity • Automatic headlamp switch-off function • Vehicle-speed dependent wiper • Outside mirror automatic rest function The buzzer will sound in 10 seconds (indicating that the ETACS-ECU enters the adjustment mode), but the washer switch must remains off for 20 seconds in order to initialize all the functions. If the windshield washer switch remains on for more than 20 seconds without entering the adjustment mode, the system enters the adjustment mode in 10 seconds, but does not initialize all of the functions.

INSPECTION CHART FOR TROUBLE SYMPTOMS

Trouble symptom	Inspection procedure No.	Reference page
None of the doors can be locked or unlocked using the transmitter.	1	42-67
All of the doors can be locked and unlocked using the transmitter, but the room lamp or turn-signal lamp does not flash or illuminate. (However, the room lamp operates normally when the doors are opened and closed.)	2	42-68
Encrypted codes cannot be registered.	3	42-69
Power windows do not operate using the transmitter (the doors can be locked or unlocked using the transmitter).	4	42-70

INSPECTION PROCEDURE FOR TROUBLE SYMPTOMS

INSPECTION PROCEDURE 1

None of the doors can be locked or unlocked using the transmitter.	Probable cause
The cause may be a malfunction of the transmitter or ETACS-ECU, defective connection between ETACS-ECU and junction block, defective power supply voltage to ETACS-ECU input line due to commercial equipment, or the lock and unlock signals are not being sent to the ETACS-ECU.	• Malfunction of transmitter • Malfunction of ETACS-ECU • Malfunction of key reminder switch • Malfunction of wiring harness or connector • Malfunction of door switch • Defective connection between ETACS-ECU and junction block • Defective power supply voltage to ETACS-ECU input line due to commercial equippment

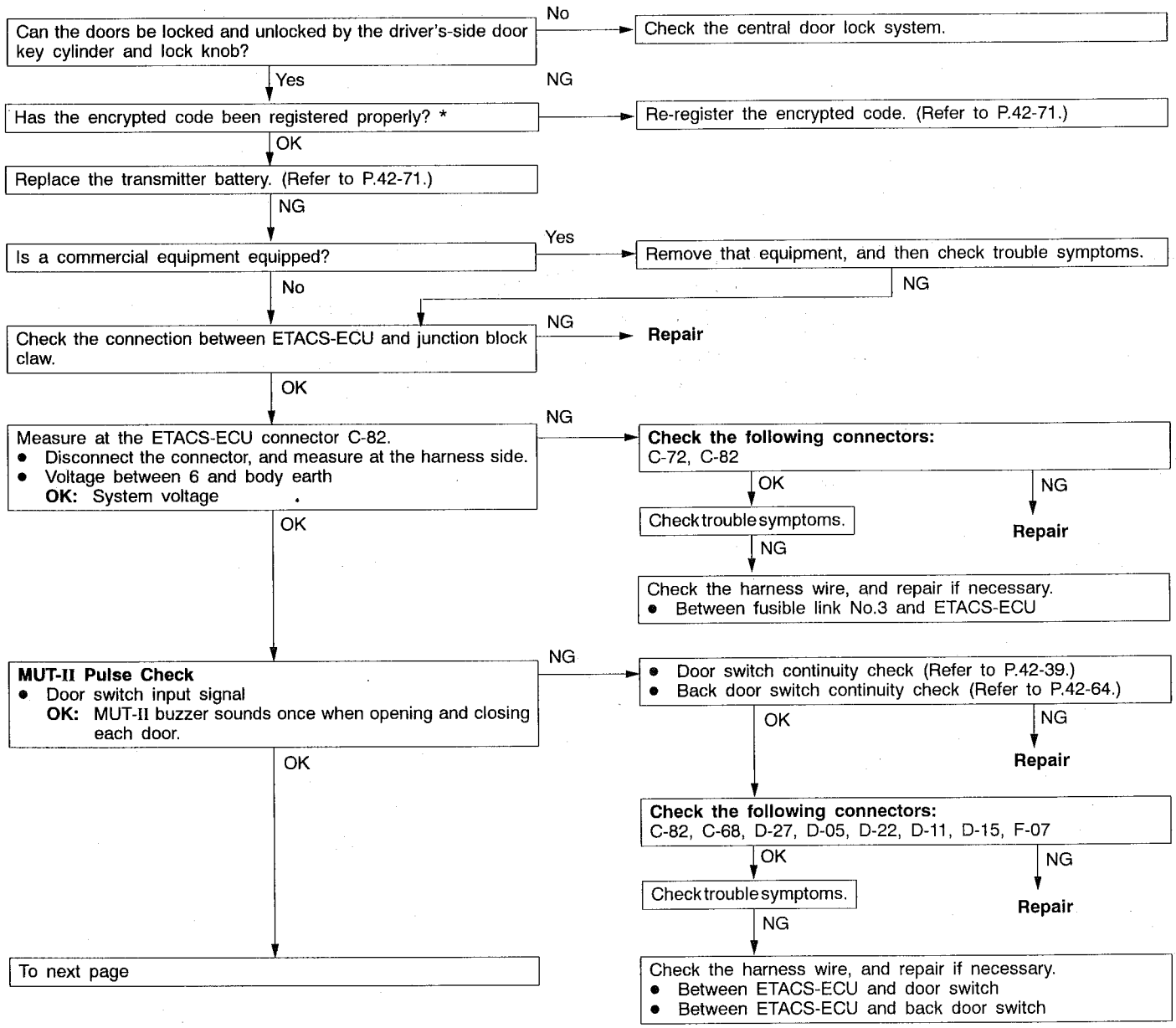

NOTE

*: This should be done if a transmitter, receiver or ETACS-ECU has been replaced, and if a secret code has not been registered properly.

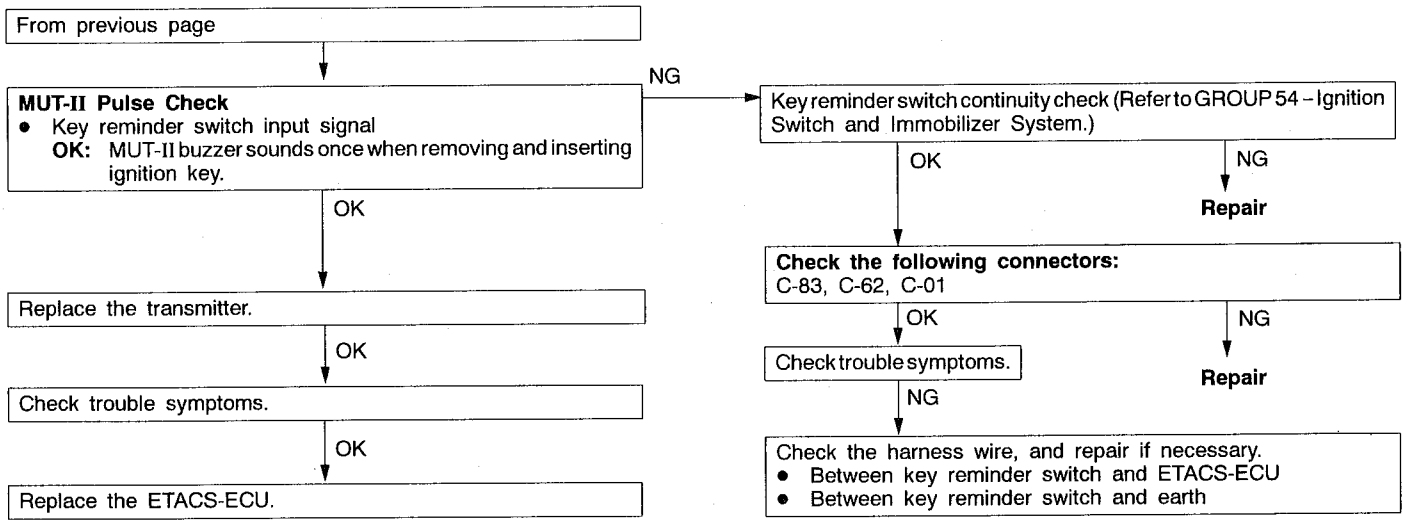

INSPECTION PROCEDURE 2

All of the doors can be locked and unlocked using the transmitter, but the room lamp or turn-signal lamp does not flash or illuminate. (However, the room lamp operates normally when the doors are opened and closed.)	Probable cause
If neither room lamp nor turn-signal lamp flash/illuminate, the cause may be a malfunction of the ETACS-ECU or driver's-side door lock actuator. If either room lamp or turn-signal lamp does not flash/illuminate, the cause may be a malfunction of the room lamp circuit or turn-signal lamp.	• Malfunction of ETACS-ECU • Malfunction of driver's door lock actuator • Burnt turn-signal lamp bulb • Malfunction of connector or wiring harness

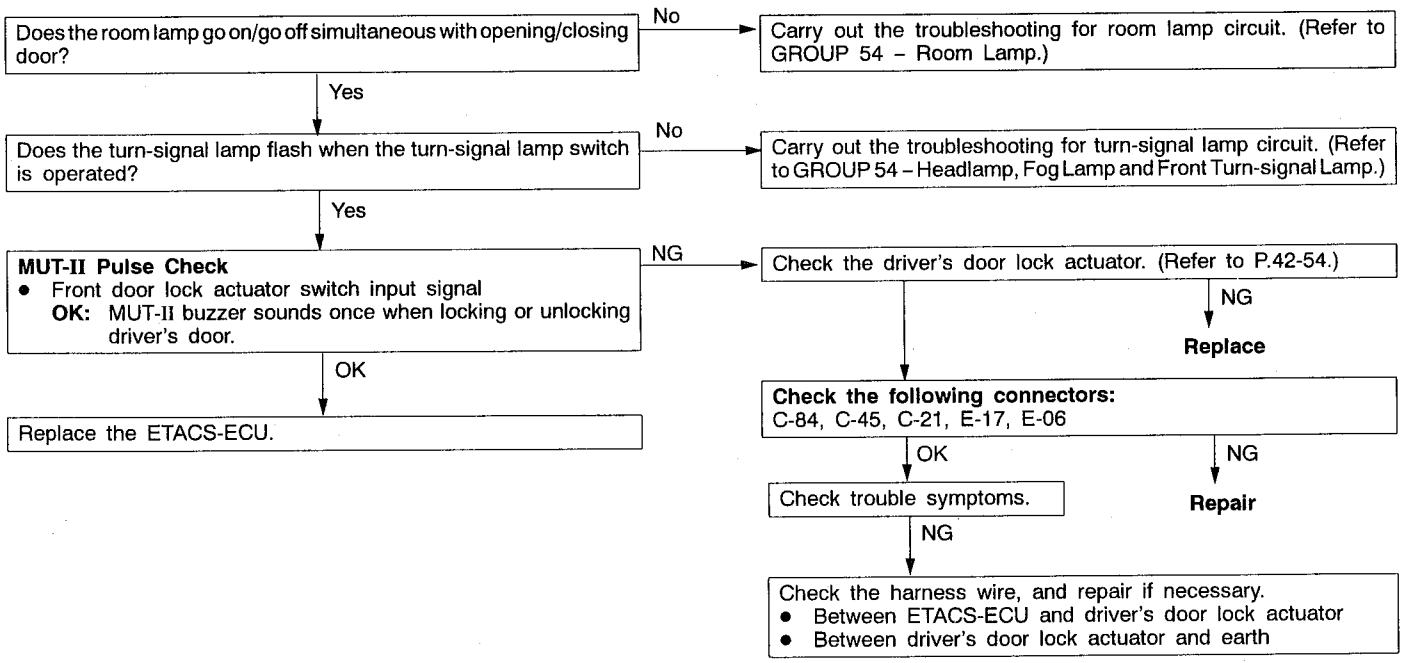

INSPECTION PROCEDURE 3

Encrypted codes cannot be registered.	Probable cause
The cause may be a malfunction of the diagnosis connector, ETACS-ECU or diagnosis output circuit.	• Malfunction of MUT-II • Malfunction of connector or wiring harness • Malfunction of ETACS-ECU

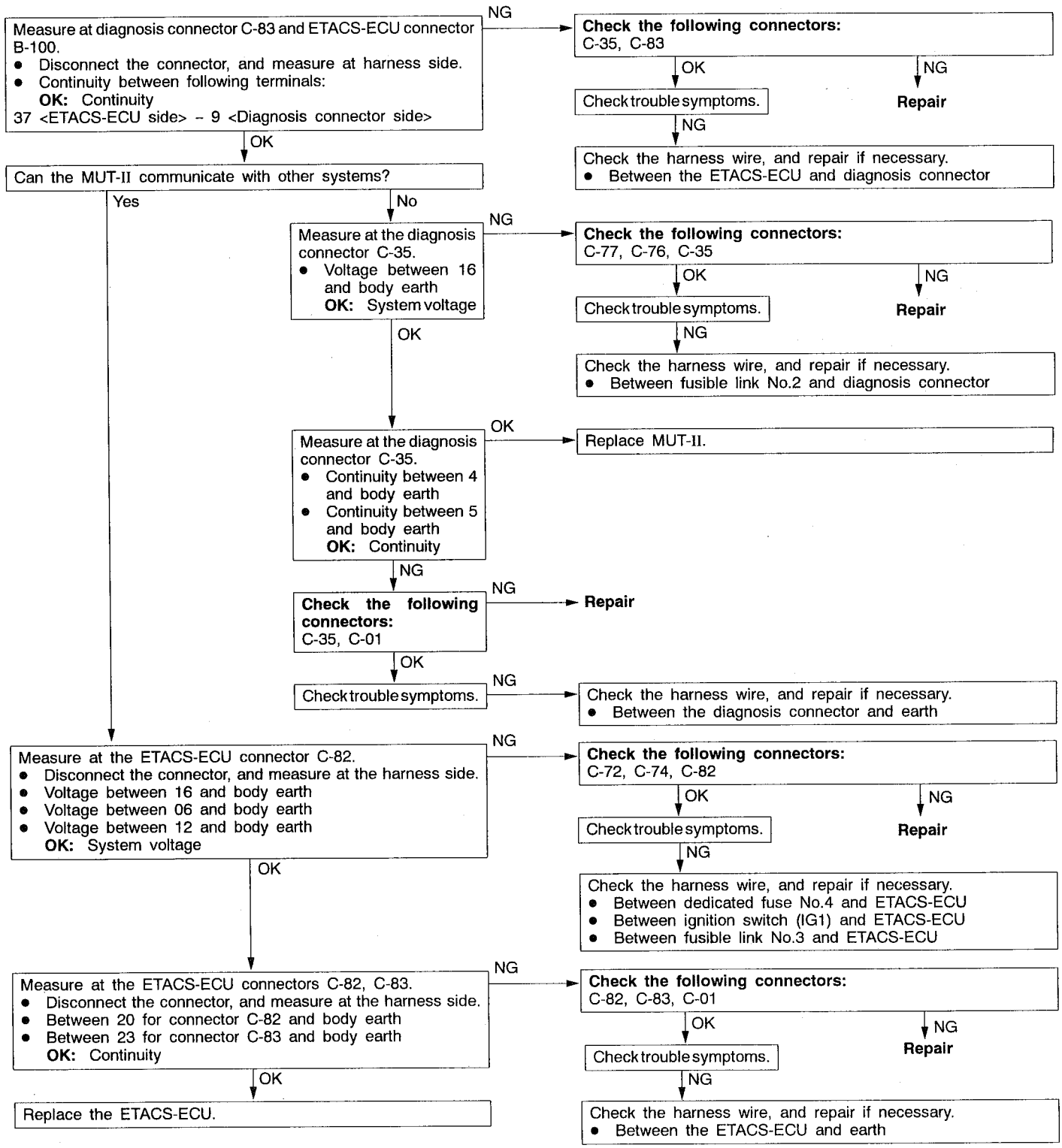

INSPECTION PROCEDURE 4

Power windows do not operate using the transmitter (the doors can be locked or unlocked using the transmitter).	Probable cause
The cause may be a malfunction of the communication line.	• Malfunction of ETACS-ECU • Malfunction of power window main switch • Malfunction of connector or wiring harness

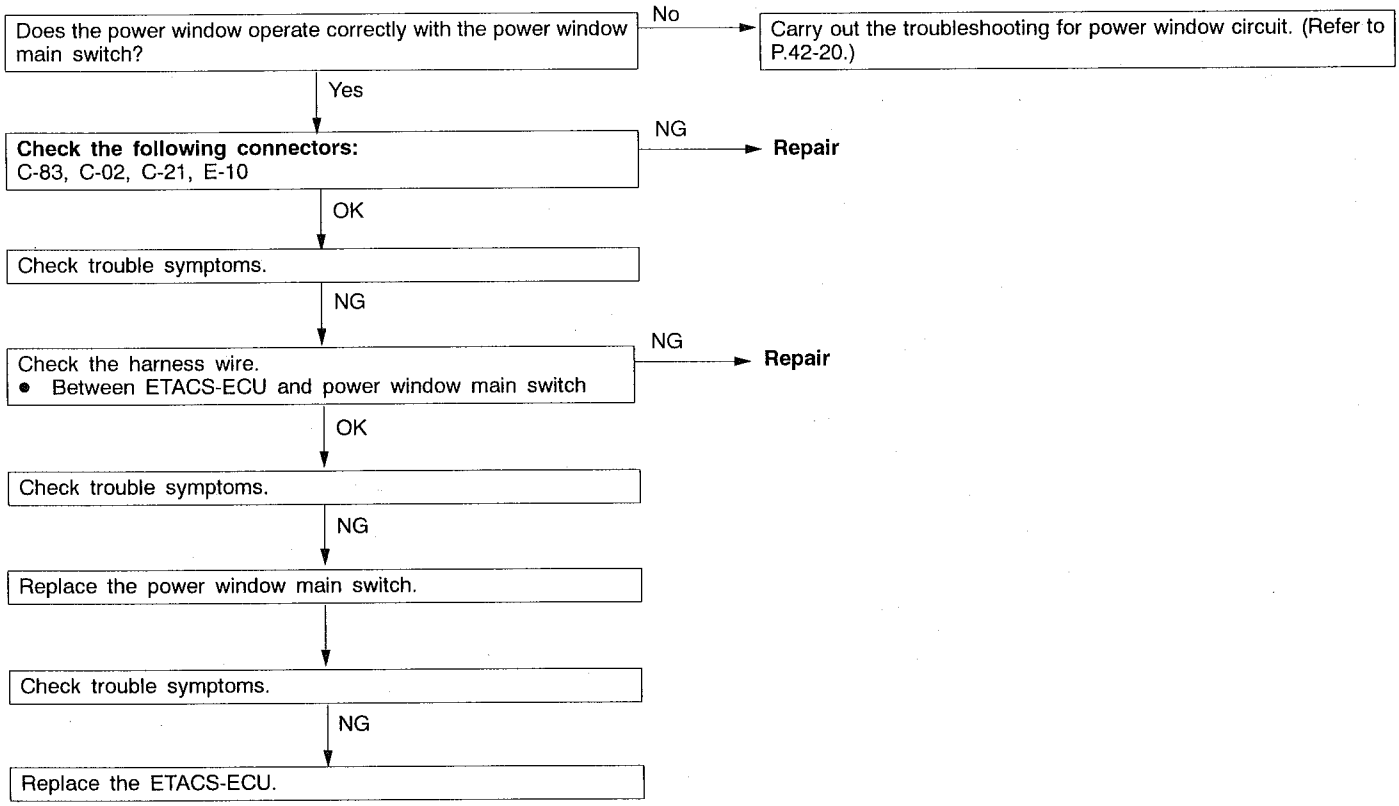

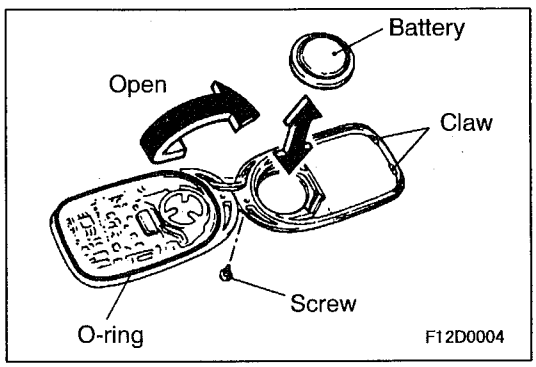

ON-VEHICLE SERVICE

HOW TO REPLACE A BATTERY OF THE TRANSMITTER

1. Remove the set screw to remove the battery from the transmitter.
2. Install a battery with its (+) side face-down.

   Battery required for replacement:
   Coin type battery CR2032
3. Insert the claw first, and with care not to displace the O-ring, assemble the transmitter.
4. Check to see if the keyless entry system operates.

   NOTE
   (1) Do not let water or dust stick to the inside of the transmitter when it is open. Also, do not touch the precision electronic device.
   (2) If the O-ring is displaced during the assembly of the transmitter, water or dust penetrates in it causing trouble.

ENCRYPTED CODE REGISTRATION METHOD

Each individual encrypted code is registered inside the transmitter, and so it is necessary to register these codes with the EEPROM inside the ETACS-ECU in the following cases.

- When either the transmitter or ETACS-ECU is replaced;
- If a second transmitter is to be used;
- If it appears that a problem is occurring because of faulty registration of a code.

A maximum of four different codes can be stored in the memory area of the EEPROM (four different transmitters can be used). When the code for the first transmitter is registered, the previously-registered codes for four transmitters are cleared. Therefore, if you are using more than two transmitters or are adding a second transmitter, the codes for all the transmitters must be registered at the same time.

1. Check that the doors lock normally when the ignition key is inserted into the door key cylinder and turned.
2. Insert the ignition key in the ignition switch.
3. Connect the MUT-II to the diagnosis connector.

   NOTE
   This sets the system in encrypted code registration standby mode. If MUT-II is not used, connect terminal No.1 of the diagnosis connector to earth.

   Caution
   Always turn the ignition switch to LOCK (OFF) position before connecting and disconnecting the MUT-II or earth.

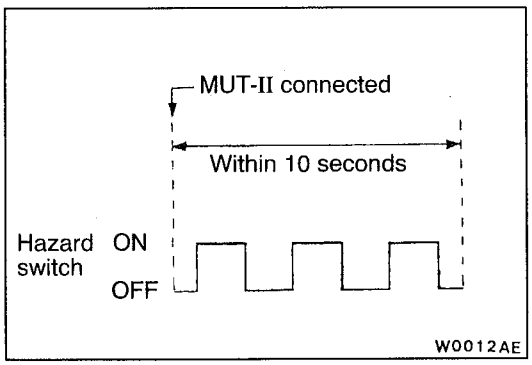

4. Within 10 seconds after connecting the MUT-II or earth, press the hazard switch six times.

   NOTE
   (1) The doors will lock and unlock once after pressing the hazard switch six times, and the system will switch to registration mode.
   (2) The hazard switch alternates between ON and OFF each time pressing the hazard switch (Refer to illustration).

5. Press the lock switch or unlock switch of the transmitter switch, and then press it two times within 10 seconds of the first press. This will register the code.
6. After registration is completed, the doors will be automatically locked and unlocked once.
7. If you are using more than two transmitters or have added a second transmitter, the same registration procedure should be carried out for the remaining transmitters, and it should be carried out within one minute after registration of the code for the first transmitter has been completed. The registration procedure are all the same for all transmitters.
8. Registration mode will be terminated under the following conditions.
   - When the encrypted codes for four transmitters have been registered;
   - When one minute has passed after registration mode started;
   - When the MUT-II is disconnected (earth is released);
   - When the ignition key is removed;
9. After registration mode has been completed, carry out the followings to make sure that the keyless entry system operates.
   - Pull the ignition key out.
   - Close all of the doors.

KEYLESS ENTRY SYSTEM

REMOVAL AND INSTALLATION

Pre-removal and Post-installation Operation
Side Cover Removal and Installation
(See GROUP 52A – Instrument Panel.)

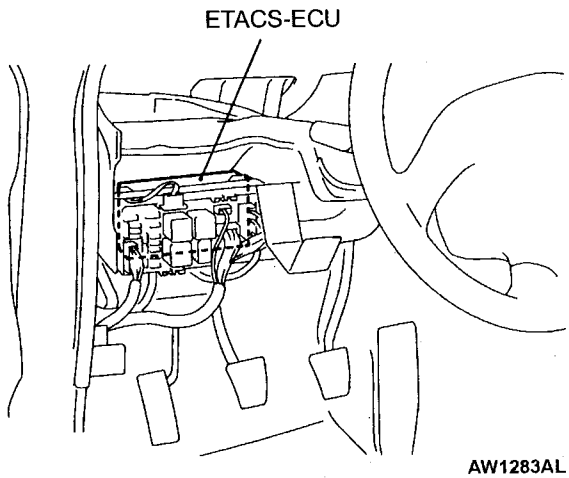

SUNROOF

SERVICE SPECIFICATION

Items	Standard value
Roof lid glass operating current A (at 20°C)	7 or less

TROUBLESHOOTING

INSPECTION CHART FOR TROUBLE SYMPTOMS

Trouble symptom	Inspection procedure	Reference page
The sunroof does not operate when the ignition switch is turned to ON.	1	42-75
The motor does not reverse its direction when a load of 140 N or more is applied while the sunroof is closing.	2	42-76
The timer does not operate during 30 seconds after the ignition switch is turned to LOCK (OFF) position.	3	42-76
Opening or closing of the sunroof is possible immediately after turning the ignition switch to LOCK (OFF) position, but the timer function does not operate continuously for another 30 seconds if the driver's side door is opened within 30 seconds.	4	42-77

INSPECTION PROCEDURE FOR TROUBLE SYMPTOMS

INSPECTION PROCEDURE 1

The sunroof does not operate when the ignition switch is turned to ON.	Probable cause
The cause may be a malfunction of a sunroof switch, sunroof-ECU power supply circuit or earth circuit.	• Malfunction of sunroof switch • Malfunction of sunroof-ECU • Malfunction of wiring harness or connector

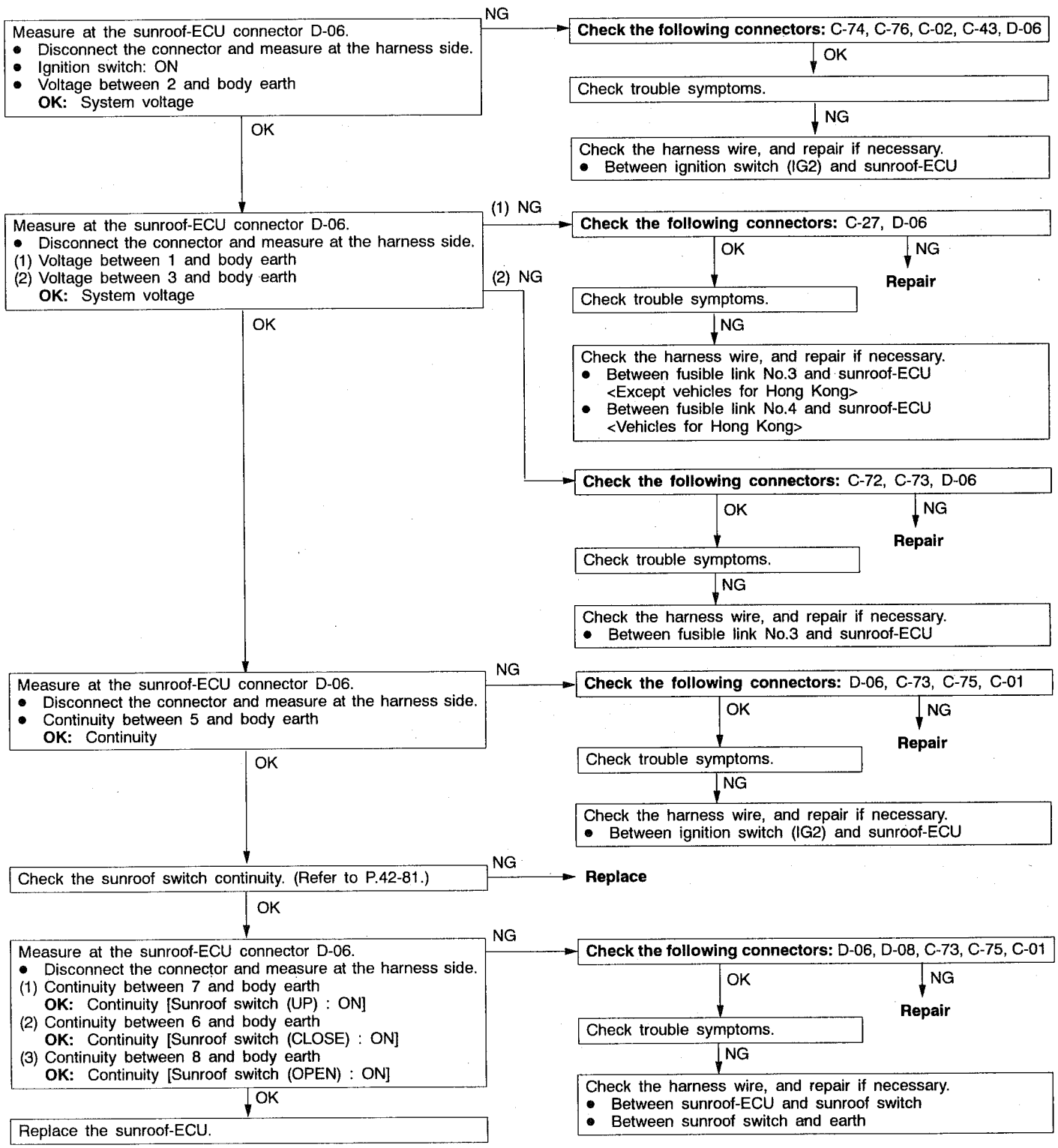

INSPECTION PROCEDURE 2

The motor does not reverse its direction when a load of 140 N or more is applied while the sunroof is closing.	Probable cause
The sunroof-ECU monitors the load conditions from the amount of current flowing to the motor. If more than the constant amount of current is flowing, the direction of motor operation is reversed to prevent jamming. If the motor does not reverse direction even when an excessive load is being applied, the cause may be a malfunction of the sunroof-ECU.	• Malfunction of sunroof-ECU

Replace the sunroof-ECU.

INSPECTION PROCEDURE 3

The timer does not operate during 30 seconds after the ignition switch is turned to LOCK (OFF) position.	Probable cause
The sunroof-ECU has a timer function which operates during 30 seconds after the ignition switch is turned to LOCK (OFF) position. If the timer does not operate, the cause may be a malfunction of the ETACS-ECU, sunroof-ECU or of the wiring harness or connector.	• Malfunction of wiring harness or connector • Malfunction of sunroof-ECU • Malfunction of the ETACS-ECU

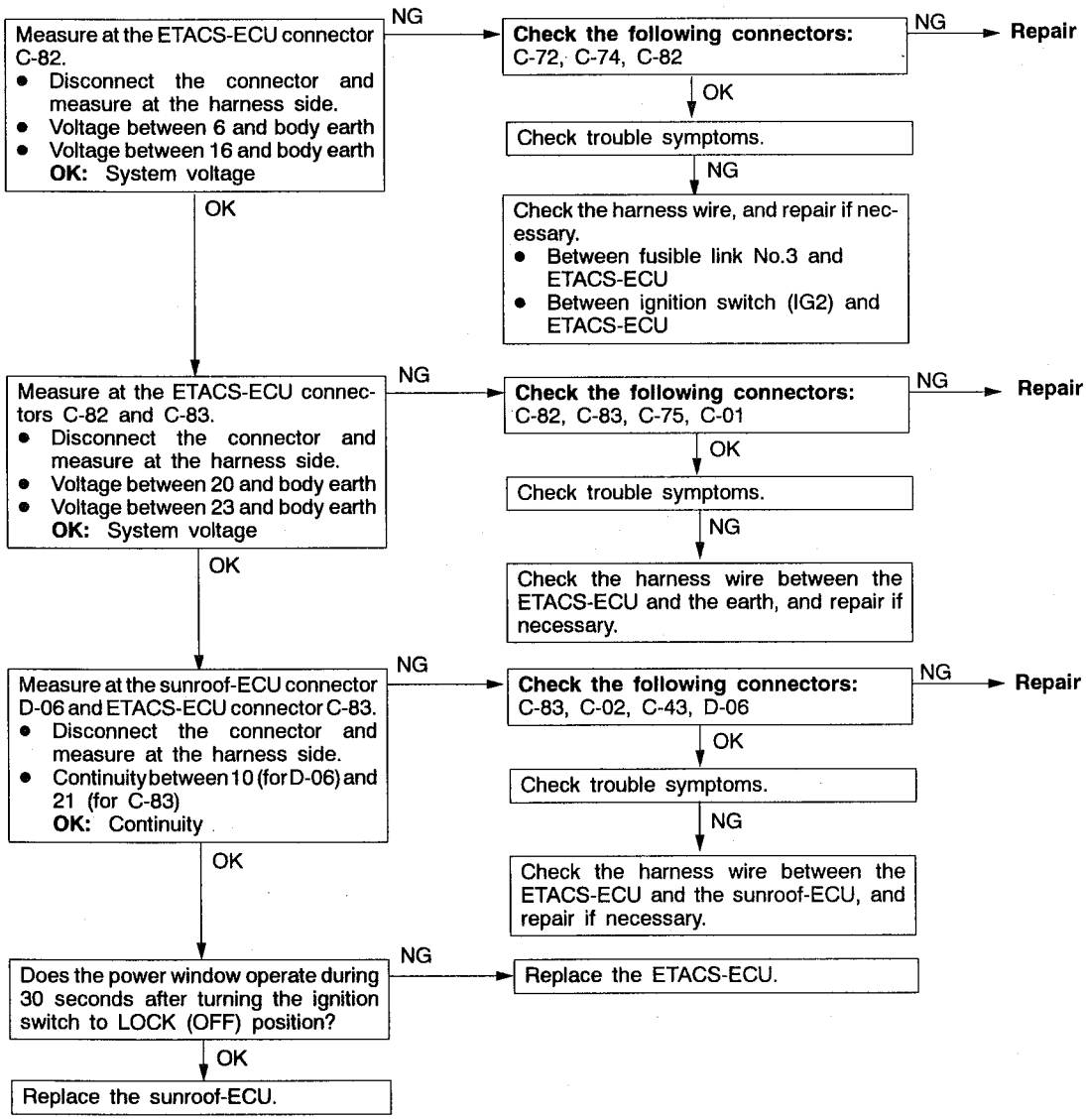

INSPECTION PROCEDURE 4

Opening or closing of the sunroof is possible immediately after turning the ignition switch to LOCK (OFF) position, but the timer function does not operate continuously for another 30 seconds if the driver's side door is opened within 30 seconds.	**Probable cause**
The operation period for the sunroof timer is extended when an on signal is output from the driver's-side door switch. Because of this, if the timer operation period is not extended, the cause may be a malfunction of the door switch input circuit.	• Malfunction of wiring harness or connector • Malfunction of driver's door switch • Malfunction of ETACS-ECU

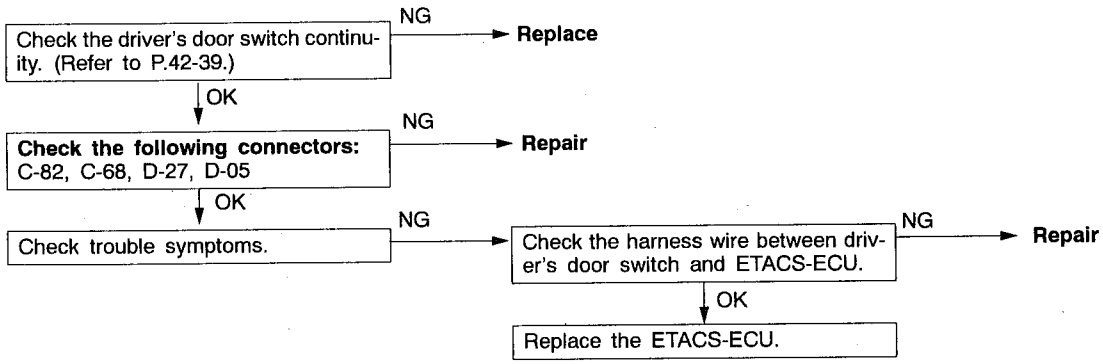

SUNROOF-ECU TERMINAL VOLTAGE CHART

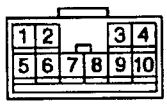

V1334AE

Terminal No.	Check Item	Check Condition		Normal Condition
1	ECU power supply	Always		System voltage
2	Sensor power supply	Ignition switch: ON		System voltage
5	Earth	Always		0 V
6	Sunroof switch (CLOSE, DOWN input)	Sunroof switch (close position or down position)	ON	0 V
			OFF	System voltage
7	Sunroof switch (UP input)	Sunroof switch (up position)	ON	0 V
			OFF	System voltage
8	Sunroof switch (OPEN input)	Sunroof switch (open position)	ON	0 V
			OFF	System voltage

ON-VEHICLE SERVICE

WATER TEST

Check if there are any leaks in the sunroof by the following procedure.

1. Fully close the roof lid glass.
2. Adjust the water pressure so that water comes out of the hose to a height of approximately 50 cm when the hose is held vertically facing upwards.

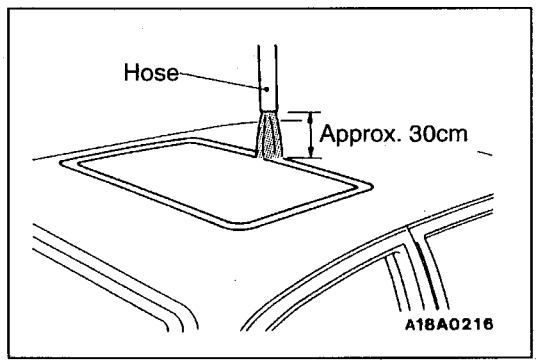

3. Hold the end of the hose approximately 30 cm above the roof and let the water run onto the weatherstrip for 5 minutes or more.
4. While doing this, check if any water leaks through into the passenger compartment from around the roof lid glass.

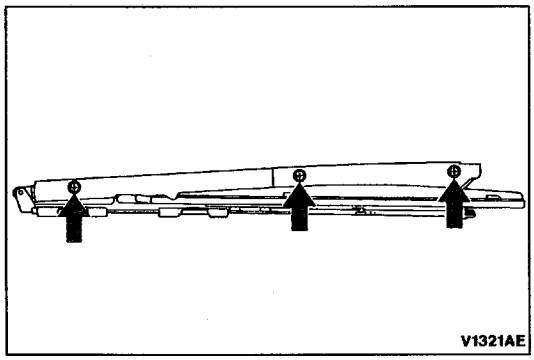

SUNROOF FIT ADJUSTMENT

1. Fully close the roof lid glass.
2. Fully open the sunshade.
3. Loosen the roof lid glass assembly mounting screws, and then slide the roof lid glass assembly along the slot in the drive cable assembly to adjust the height of the roof lid glass.
4. After adjustment, check to be sure that the sunroof operates smoothly.

SUNROOF

REMOVAL AND INSTALLATION

Post-installation Operation
- Sunroof Water Test (Refer to P.42-78.)
- Sunroof Fit Adjustment (Refer to P.42-78.)

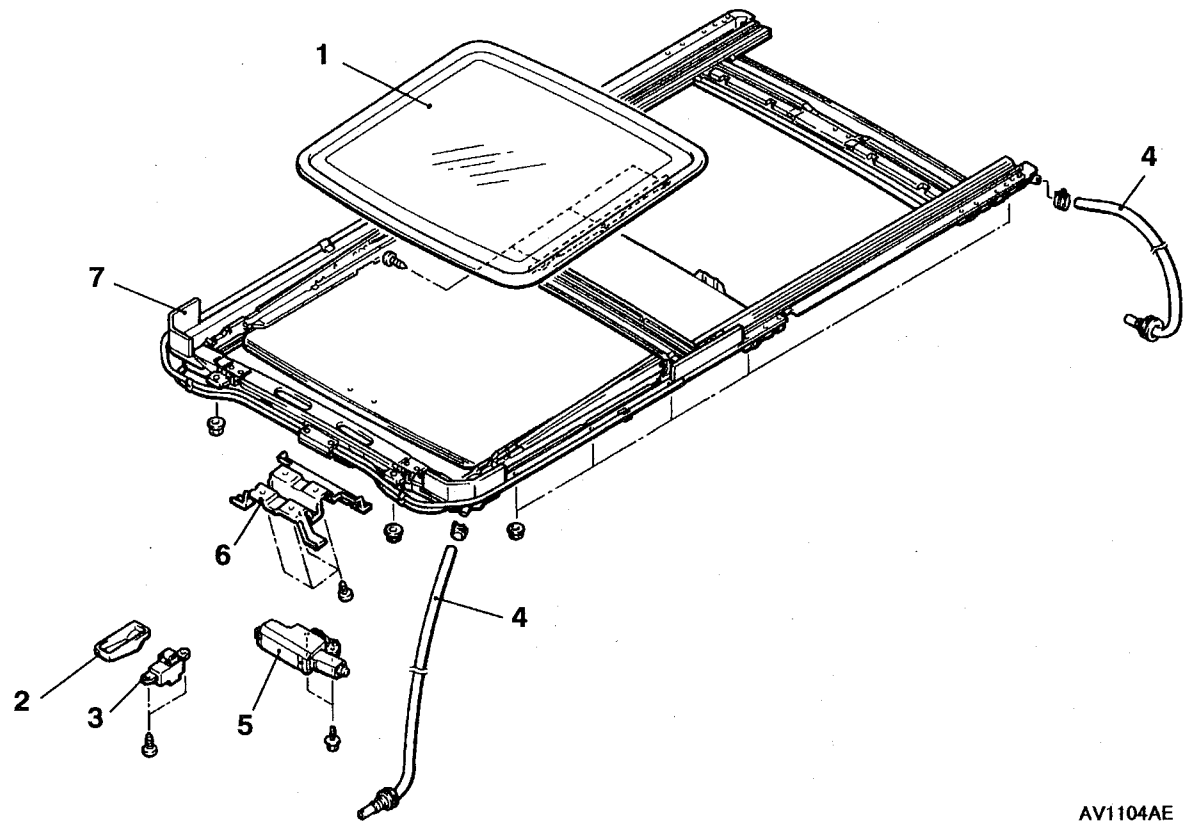

1. Roof lid glass assembly

Sunroof switch removal steps

2. Sunroof switch cover
3. Sunroof switch

Drain hose removal steps

- Headlining
- Splash shield (Rear drain hose)
- Cowl side trim and instrument lower panel (Refer to GROUP 51.)
- Engine-ECU, throttle servo relay and throttle controller (Driver's-side drain hose)

◀A▶ ▶A◀ 4. Drain hose

Sunroof motor assembly removal steps

- Headlining

◀B▶ ▶B◀ 5. Sunroof motor assembly

Sunroof assembly removal steps

- Headlining

◀A▶ ▶A◀ 4. Drain hose
6. Room lamp bracket
7. Sunroof assembly

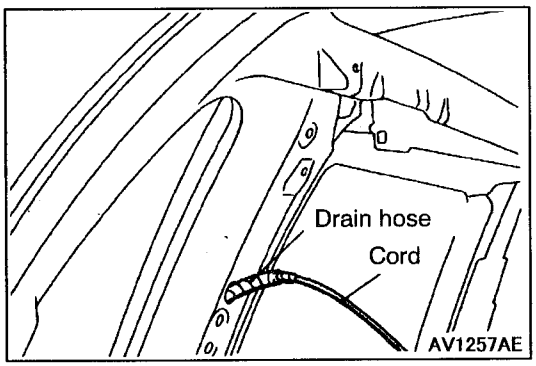

REMOVAL SERVICE POINTS

◀A▶ DRAIN HOSE REMOVAL

Tie a cord to the end of the drain hose, and wind tape around it so that there is no unevenness. Then pull the drain hose out from the passenger compartment.

◀B▶ SUNROOF MOTOR ASSEMBLY REMOVAL

Caution
Always close the roof lid glass fully before removing the sunroof motor. If the fully-closed positions of the roof lid glass and the sunroof motor are not the same, the sunroof will not operate properly.

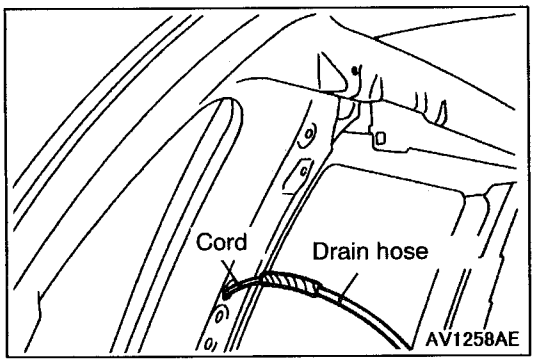

INSTALLATION SERVICE POINTS

▶A◀ DRAIN HOSE INSTALLATION

1. Tie the cord that was used during removal to the end of the drain hose, and wind tape around it so that there is no unevenness.
2. Pull the cord to pull through the drain hose

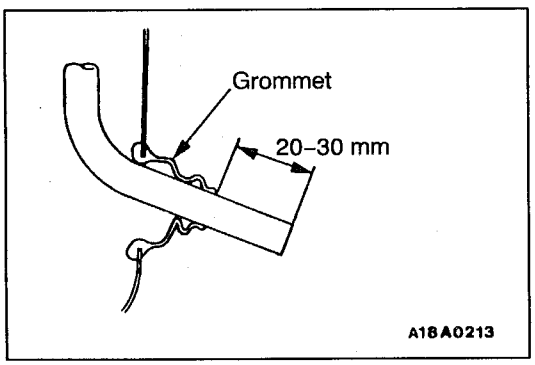

3. Install the grommet, and then position the drain hose so that it protrudes from the grommet as shown in the illustration.

▶B◀ SUNROOF MOTOR ASSEMBLY INSTALLATION

If the fully-closed position of the sunroof motor assembly is incorrect, set the sunroof motor to the fully-closed position by the following procedure, and then install the sunroof motor.

1. Remove the sunroof motor assembly with the connector still connected.
2. Set the roof lid glass to the fully-closed position.
3. Continue to push the sunroof close switch until the sunroof motor stops turning. Then install the sunroof motor assembly.

   NOTE
   Sunroof-ECU will initialize when the sunroof motor stops.

<Except vehicles for Hong Kong>

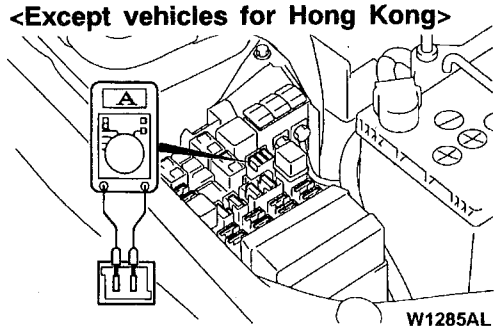

W1285AL

<Vehicles for Hong Kong>

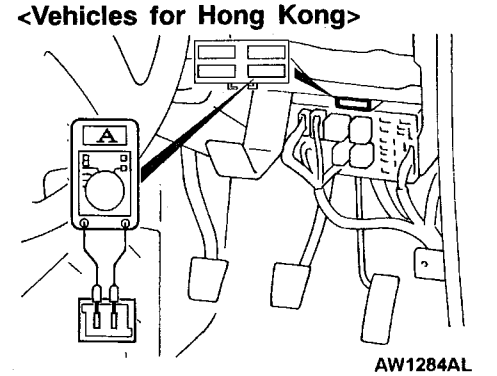

AW1284AL

INSPECTION

ROOF LID GLASS OPERATION CURRENT CHECK

1. Remove the sunroof fuse and connect a circuit analyser as shown in the illustration.
2. Press the sunroof switch to operate the sunroof, and then measure the operation current while the roof lid glass is moving (except when the sunroof starts to operate, when it is fully open, when it is fully closed and when it is fully tilted up).

   Standard value: 7 A or less (at 20°C)
3. If the operation current is not within the standard value, check the following points.
   - Installation condition, warping or jamming of sunroof assembly
   - Sticking of drive cable
   - Tilt of roof lid glass

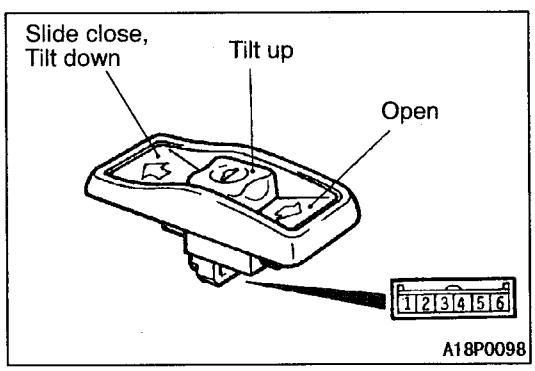

A18P0098

SUNROOF SWITCH CONTINUITY CHECK

Switch position	Terminal No.			
	3	4	5	6
Open		○	○	
Off				
Tilt up	○	○		
Slide close, Tilt down		○		○

DISASSEMBLY AND REASSEMBLY

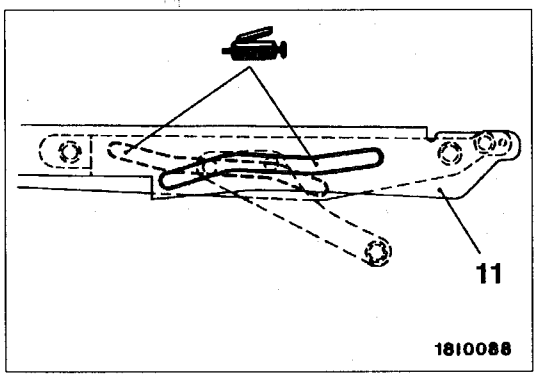

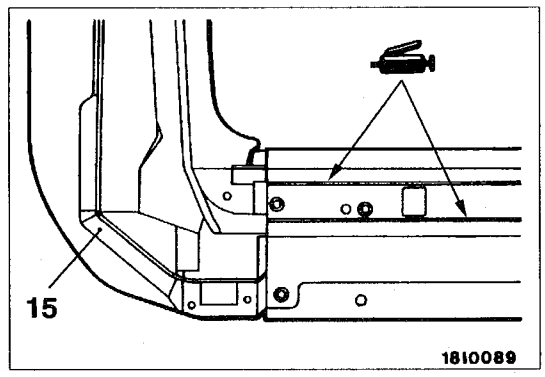

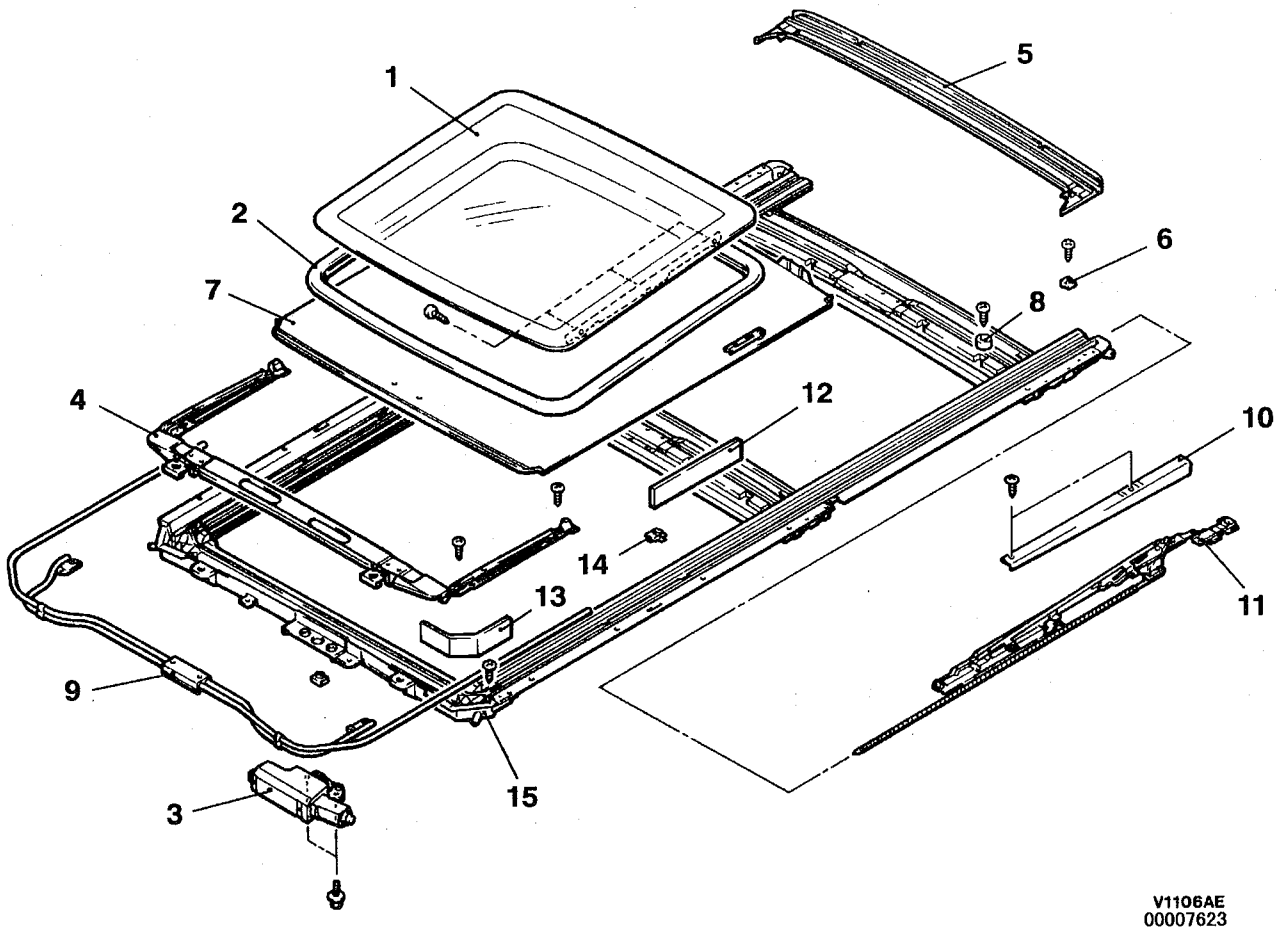

Disassembly steps

1. Roof lid glass assembly
2. Weatherstrip
3. Sunroof motor
4. Roof wind deflector panel
5. Roof drip channel
6. Panel stopper
7. Sunshade assembly
8. Guide rail stopper
9. Cable guide casing
10. Side deflector
11. Drive cable assembly
12. Seal
13. Seal
14. Clamp
15. Guide rail sub assembly